Recommended Maximum Weight

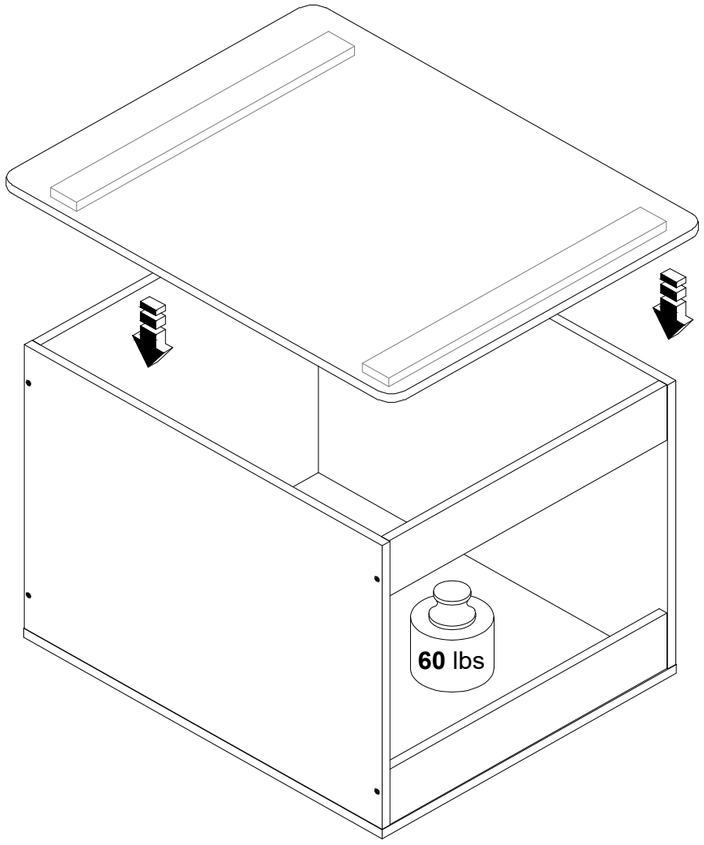

WARNING:

>This unit has been designed to support the maximum loads shown. Exceeding these load limits could cause sagging, instability, product collapse, and/or serious injury.

>DO NOT allow children to climb on unit.

> Put heavier items on lower shelves.

Furinno®

Fits Space, Fits Budget

Assembly Instruction

Furinno Peli Top Opening Litter Box Enclosure

MODEL : **20395**

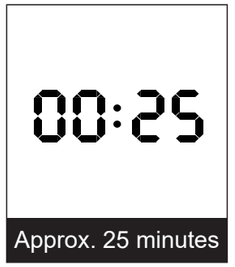

Approx. 25 minutes



Recomm. 1 Person

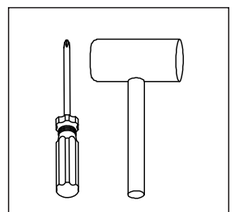

Tools Required

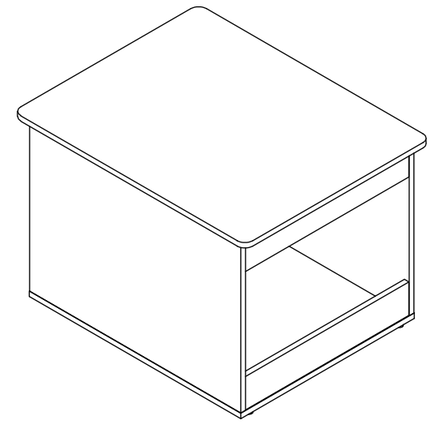

Customer Support

NEED HELP? For replacement requests or product inquiries, please contact our Customer Service Team by emailing us at **support@furinno.com**. Thank you for selecting Furinno!

www.furinno.com

HARDWARE & PARTS LIST

NO	HARDWARE LIST	QTY
1	SCREW	12pcs
2	DOWEL	8pcs
3	TAPPING SCREW	4pcs
4	NAIL LEG	4pcs

NO	PARTS LIST	QTY
A	TOP PANEL	1pc
B	SIDE PANEL	1pc
C	FRONT / BACK PANEL	2pcs
D	SMALL SIDE PANEL	2pcs
E	BOTTOM PANEL	1pc
F	FIXED PANEL	2pcs

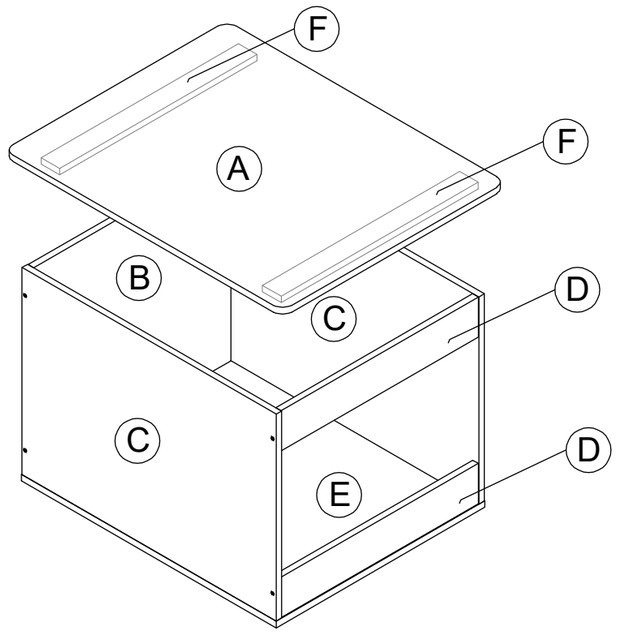

USEFUL HINTS BEFORE YOU START:

1. Read each step carefully before starting.

2. It is important that each step is performed in correct order to avoid difficulties.

3. Identify, sort and count the parts before assembly.

4. Assemble your furniture on packaging cardboard to prevent scratch or damage.

5. Clean the product with mild cleanser using soft damped cloth. Do not use harsh or abrasive cleanser.

6. Using uncompatible hardware might cause damage to product.

STEP 9

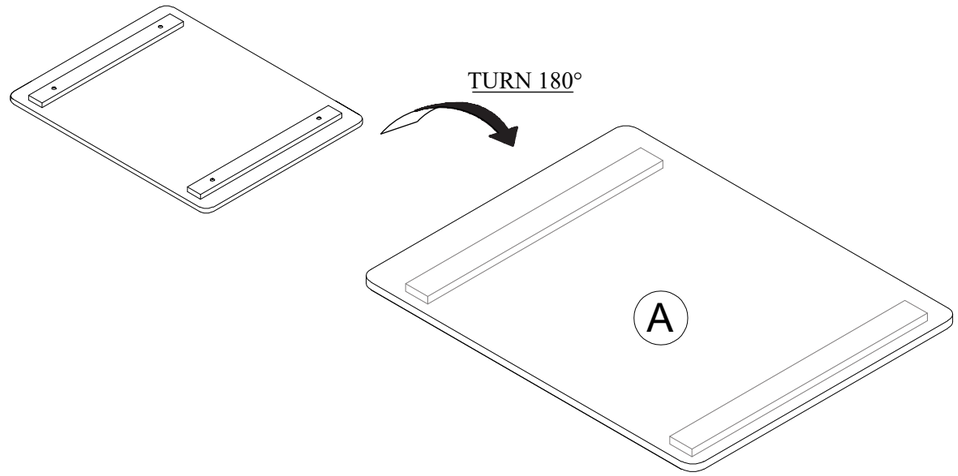

STEP 10

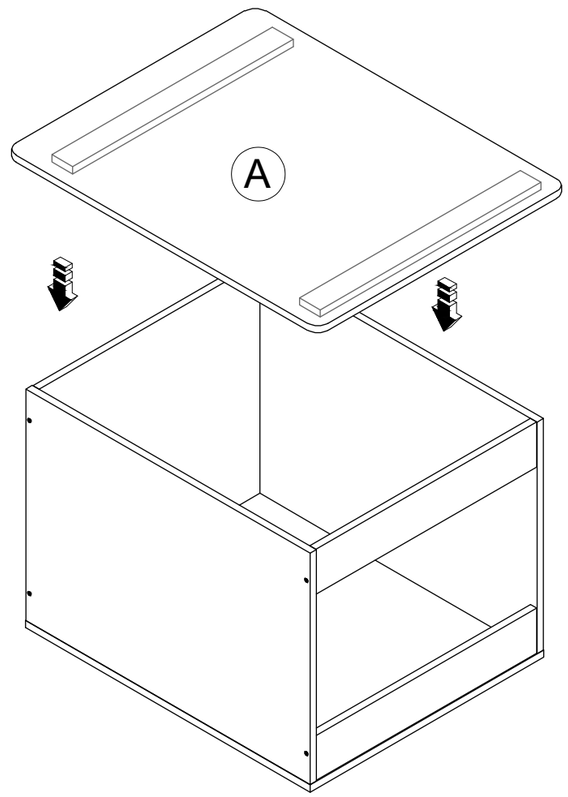

STEP 7

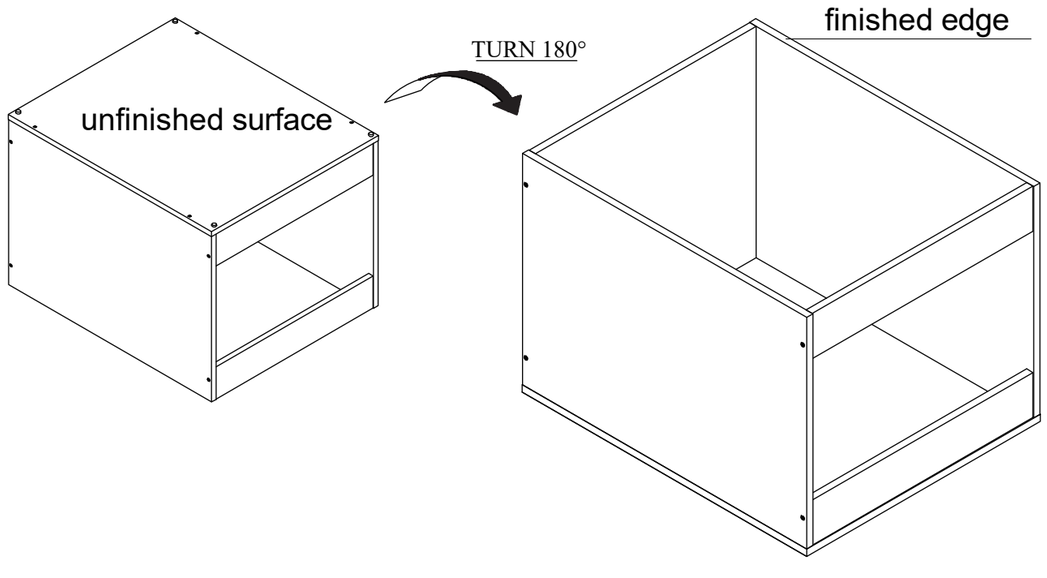

STEP 8

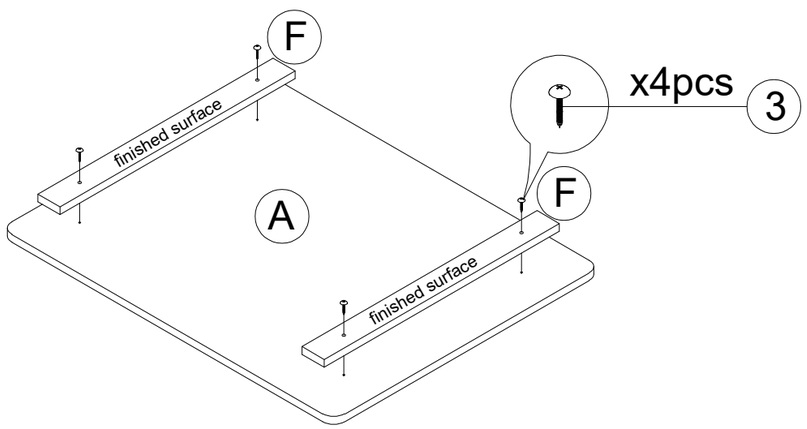

ASSEMBLY INSTRUCTIONS

BEFORE YOU BEGIN, PLEASE READ ASSEMBLY INSTRUCTIONS CAREFULLY, FOLLOW THEM STEP BY STEP.

STEP 1

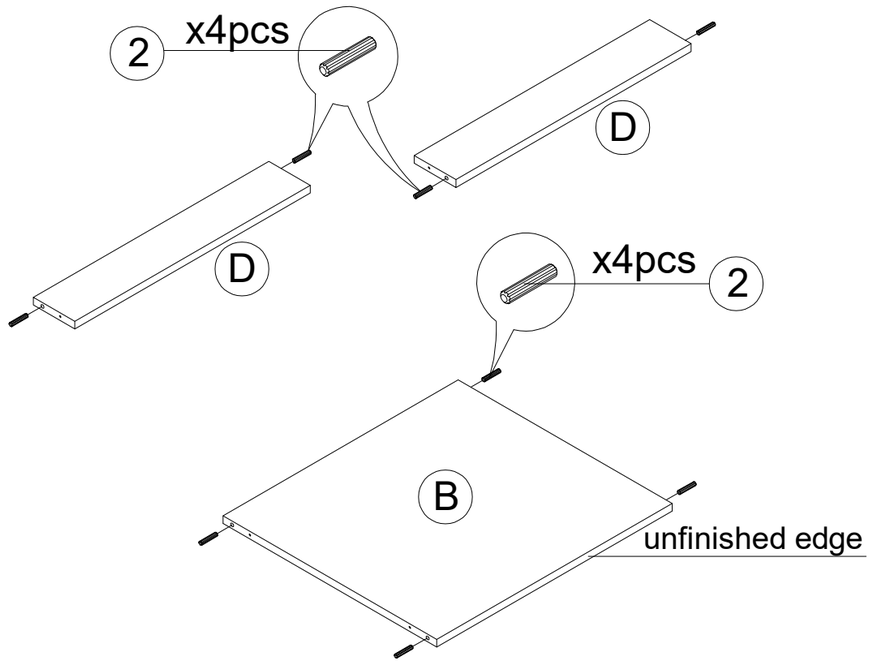

STEP 2

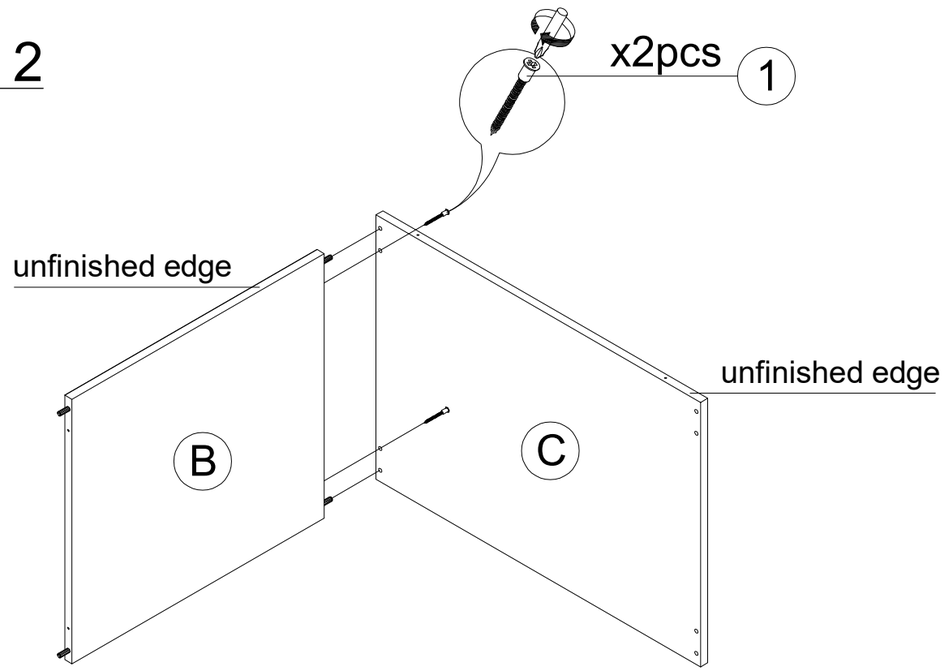

STEP 3

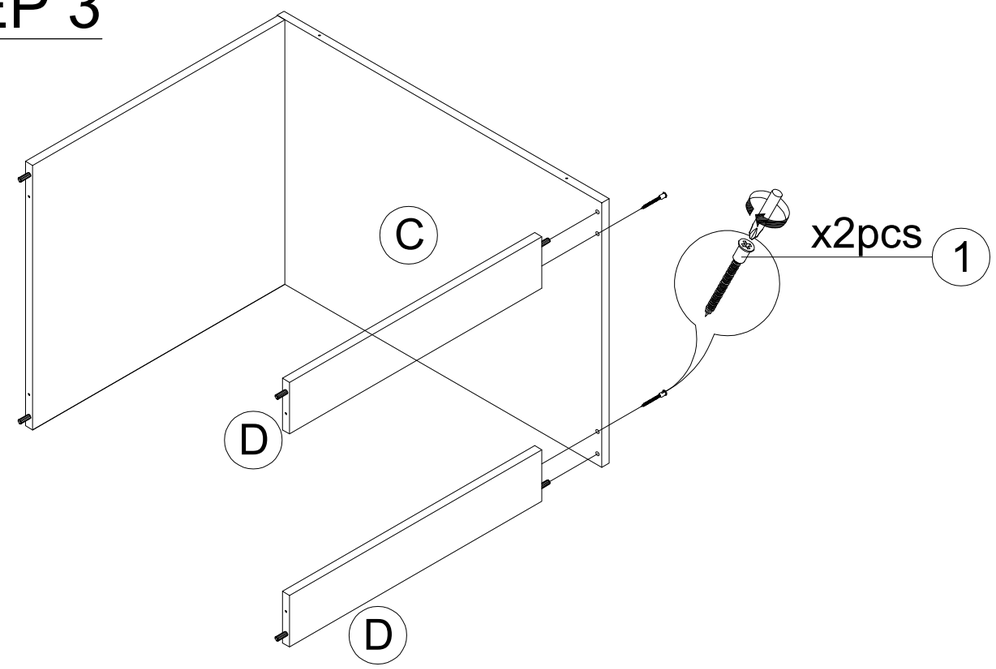

STEP 4

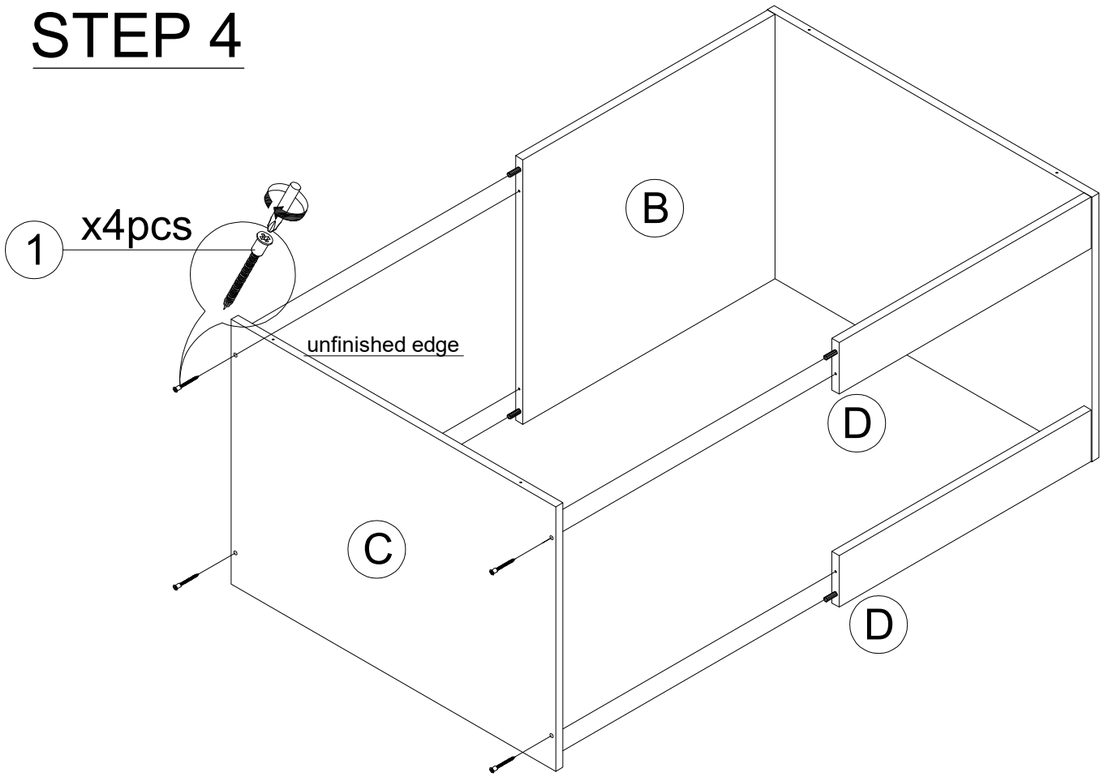

STEP 5

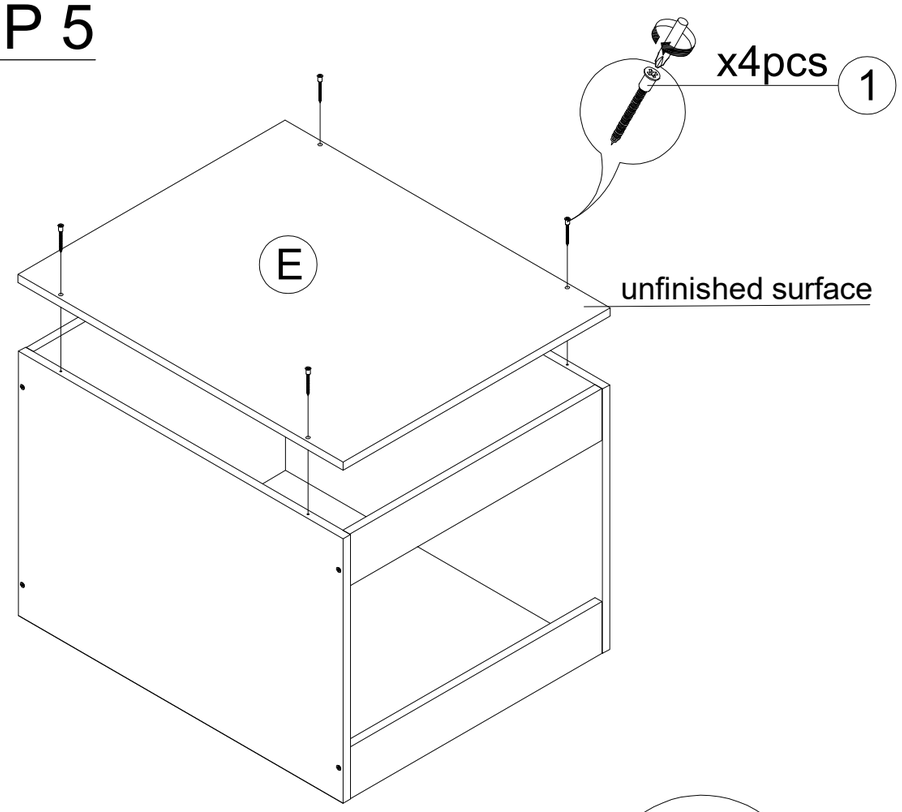

STEP 6

