STEP 5

STEP 5.1

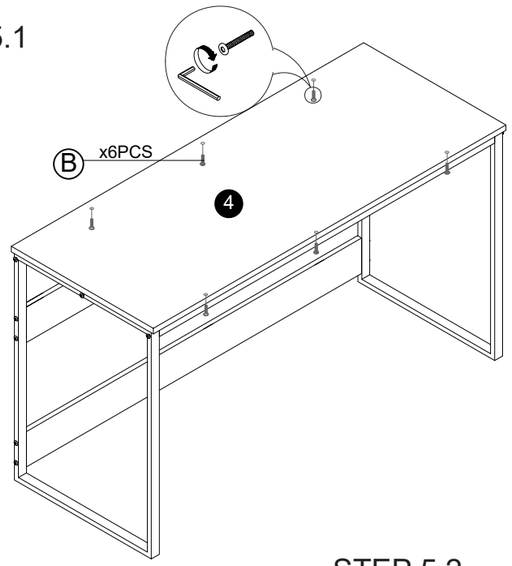

STEP 5.2

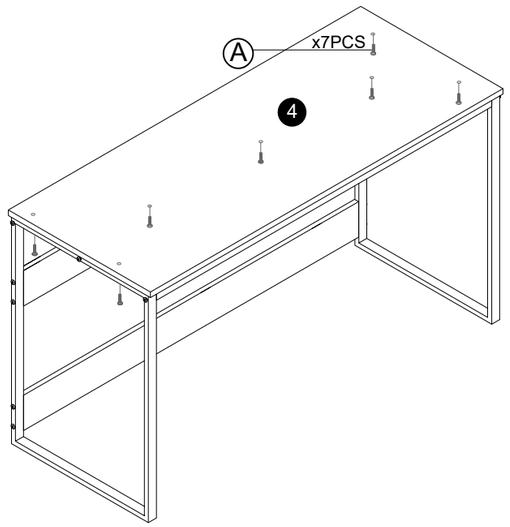

Recommended Maximum Weight

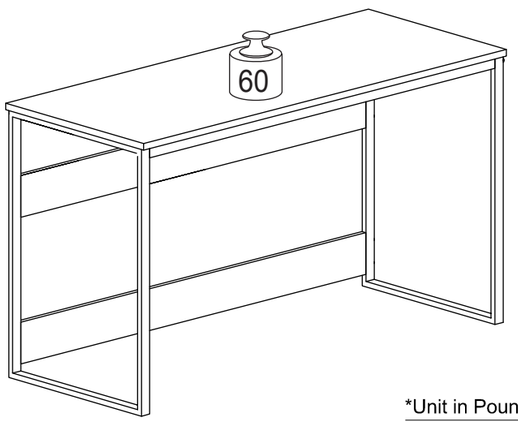

*Unit in Pound(lbs.)

WARNING:

>This unit has been designed to support the maximum loads shown. Exceeding these load limits could cause sagging, instability, product collapse, and/or serious injury.

>DO NOT allow children to climb on unit.

Furinno®
Fits Space. Fits Budget

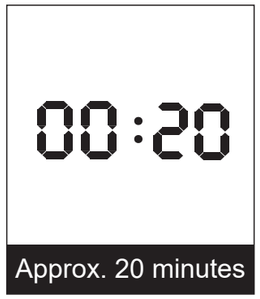

Approx. 20 minutes

Recomm. 2 Persons

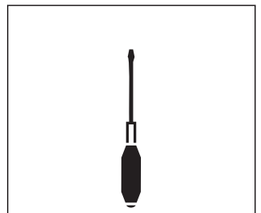

Tools Required

Assembly Instruction

Furinno Moretti Modern Lifestyle Enhanced Study Desk 52”

MODEL : **21021**

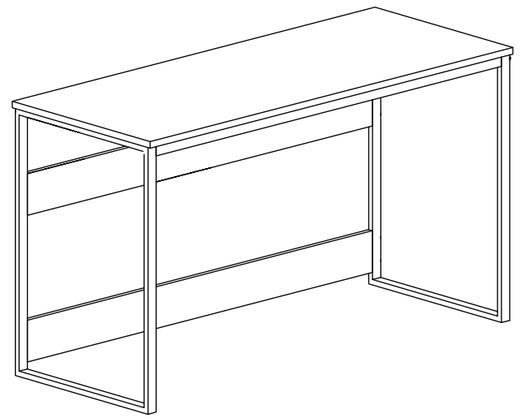

Customer Support

NEED HELP? For replacement requests or product inquiries, please contact our Customer Service Team by emailing us at **support@furinno.com**. Thank you for selecting Furinno!

www.furinno.com

2102120210529

HARDWARE & PARTS LIST

NO	HARDWARE LIST	QTY
A	SHORT SCREW	7 PCS
B	MEDIUM SCREW	6 PCS
C	LONG SCREW	14 PCS
D	ALLEN KEY	1 PC
E	BARREL NUT	8 PCS

NO	PARTS LIST	QTY
1	METAL FRAME A	2 PCS
2	METAL RAIL A	2 PCS
3	METAL RAIL B	1 PC
4	TOP PANEL	1 PC
5	SUPPORT PANEL	2 PCS

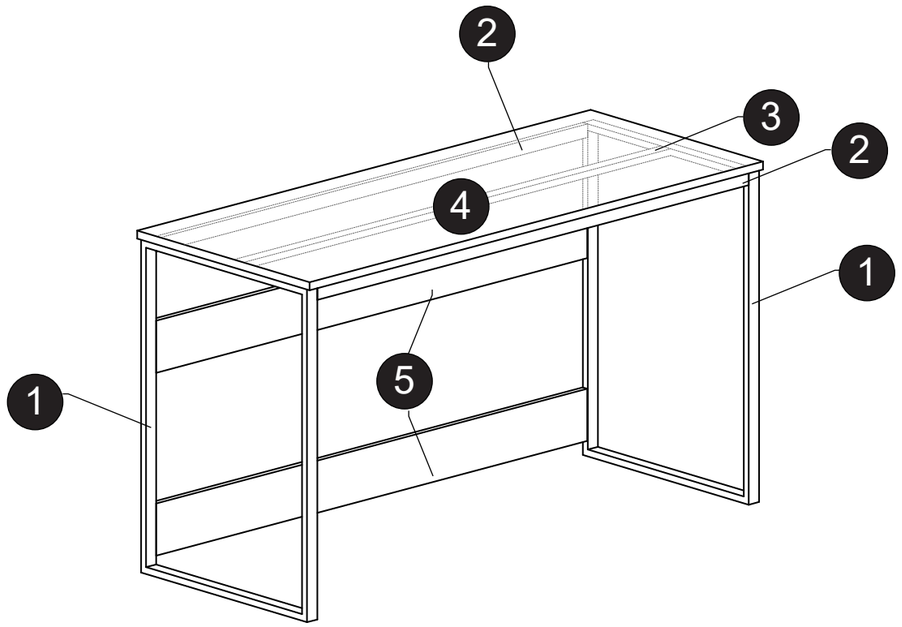

USEFUL HINTS BEFORE YOU START:

1. Read each step carefully before assembling.
2. It is important that each step is performed in correct order to avoid difficulties.
3. Identify, sort and count the parts before assembly.
4. Assemble your furniture on packaging cardboard to prevent scratch or damage.
5. Clean the product with mild cleanser using soft damped cloth. Do not use harsh or abrasive cleanser.
6. Using incompatible hardware might cause damage to product.

ASSEMBLY INSTRUCTIONS

BEFORE YOU BEGIN, PLEASE READ ASSEMBLY INSTRUCTION CAREFULLY, FOLLOW THEM STEP BY STEP.

STEP 1

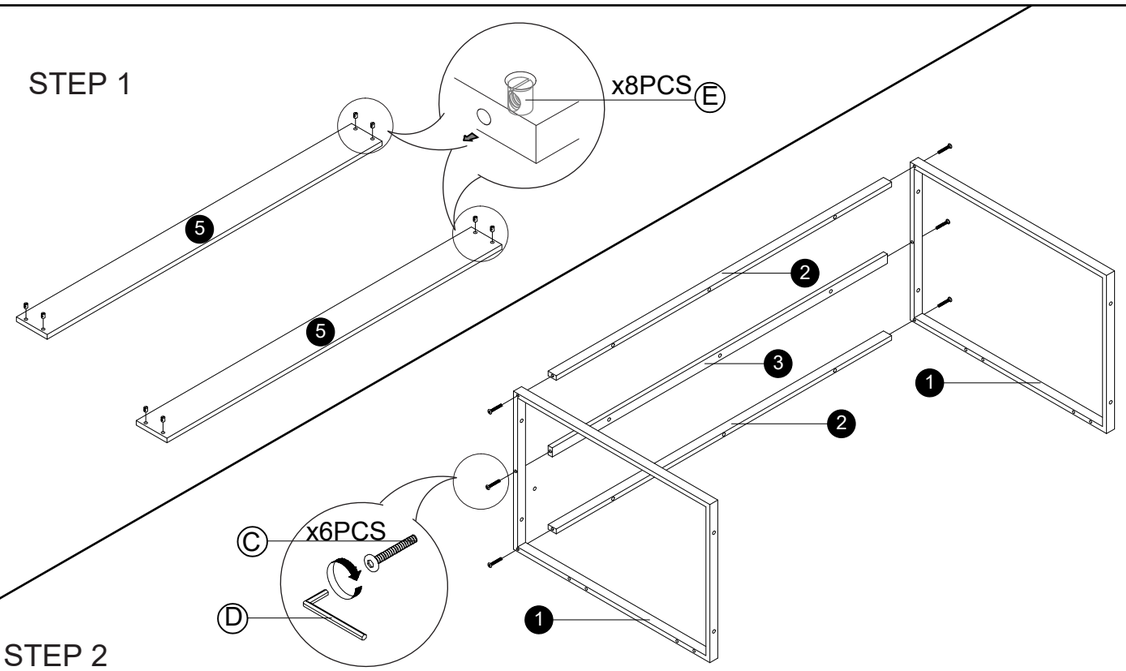

STEP 2

STEP 3

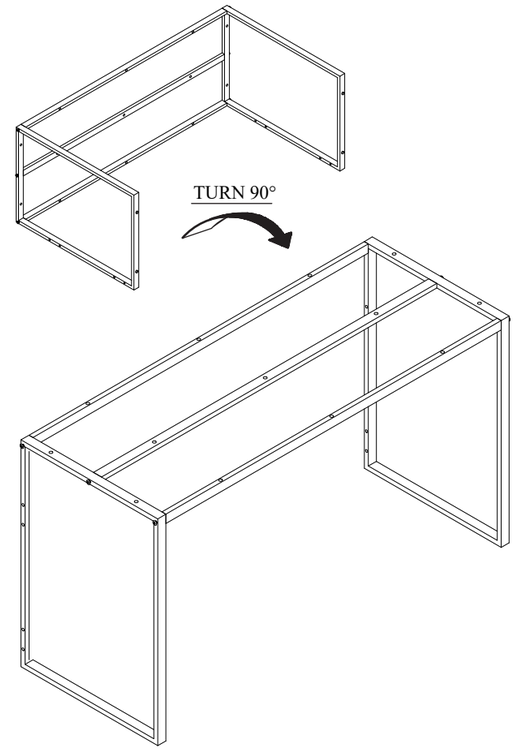

STEP 4

