Furinno®
Fits Space. Fits Budget

Assembly Instruction

Furinno 4 - Tier Toolless Kitchen Wide Storage Shelf Cart

MODEL : **21028**

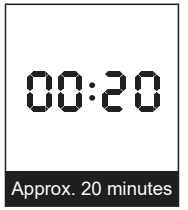

Approx. 20 minutes


Recomm. 1 Person


No Tools Required

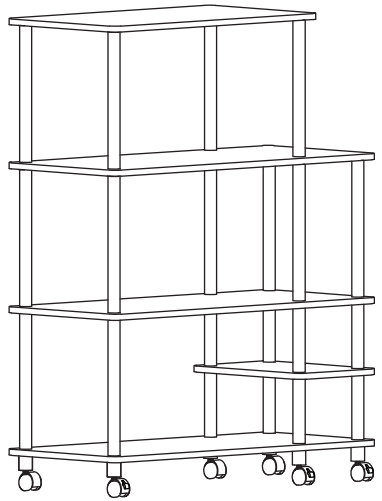

Customer Support

NEED HELP? For replacement requests or product inquiries, please contact our Customer Service Team by emailing us at **support@furinno.com**. Thank you for selecting Furinno!

www.furinno.com

2102820210407

HARDWARE AND PART LIST

NO	HARDWARE LIST	QTY
1	LONG ROUND POLE 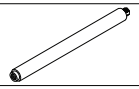	12 PCS
2	SHORT ROUND POLE 	8 PCS
3	PVC ROUND RING 	4 PCS
4	ROUND LEG + CASTER WITH LOCK 	3 SETS
5	ROUND LEG + CASTER 	3 SETS

NO	PART LIST	QTY
A	TOP PANEL	1 PC
B	2ND SHELF PANEL	1 PC
C	3RD / BOTTOM SHELF PANEL	2 PCS
D	SMALL SHELF PANEL	1 PC

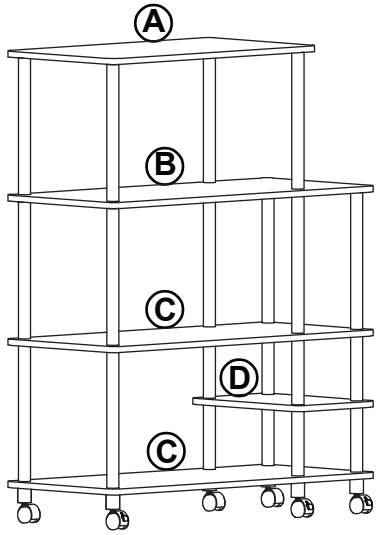

USEFUL HINTS BEFORE YOU START:

1. Read each step carefully before starting.
2. It is important that each step is performed in correct order to avoid difficulties.
3. Identify, sort and count the parts before assembly.
4. Assemble your furniture on packaging cardboard to prevent scratch or damage.
5. Clean the product with mild cleanser using soft damped cloth. Do not use harsh or abrasive cleanser.
6. Using uncompatible hardware might cause damage to product.

Recommended Maximum Weight

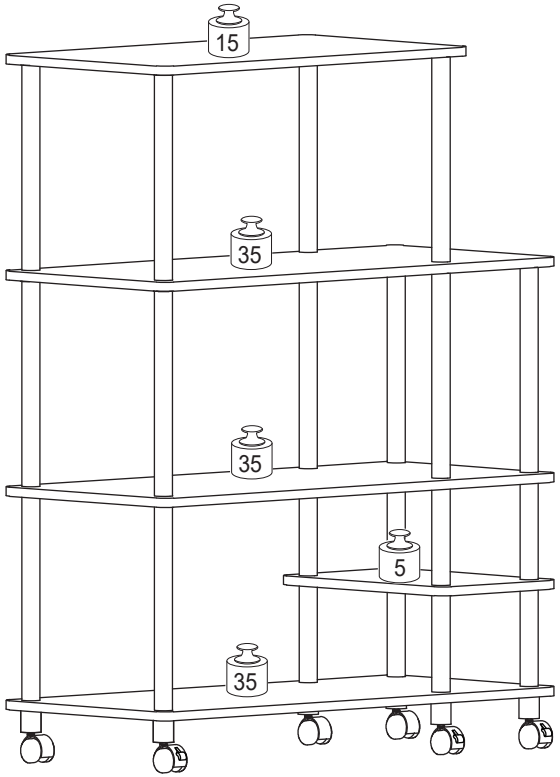

*Unit in Pound(lbs)

WARNING:

>This unit has been designed to support the maximum loads shown. Exceeding these load limits could cause sagging, instability, product collapse, and/or serious injury.

>DO NOT allow children to climb on unit.

>Put heavier items on lower shelves.

STEP 7

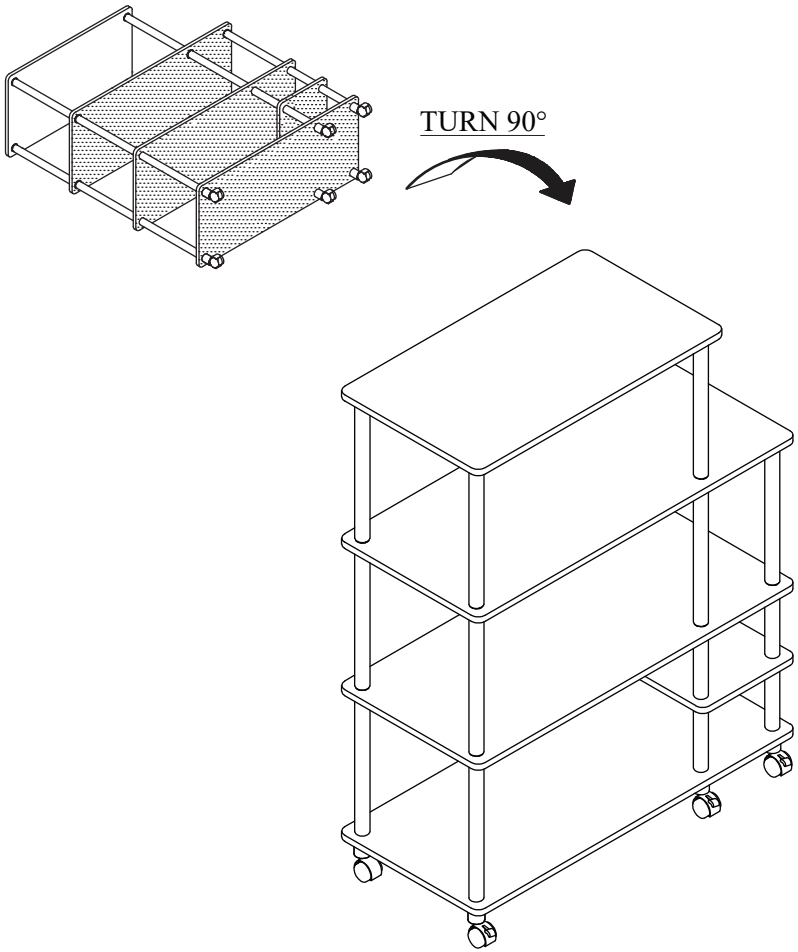

STEP 1

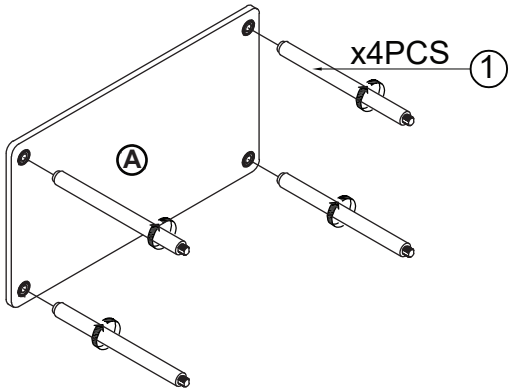

STEP 2

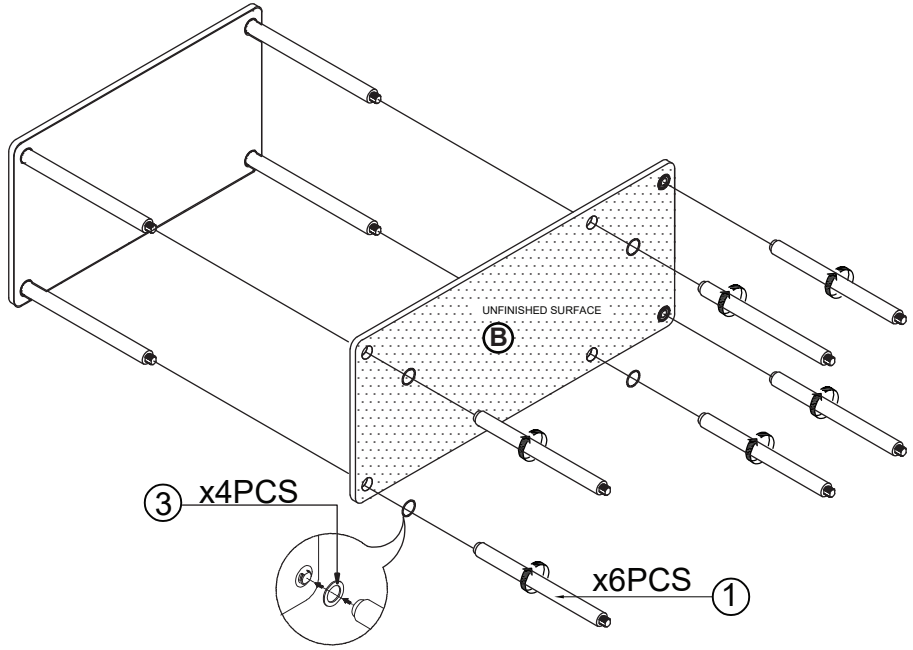

STEP 3

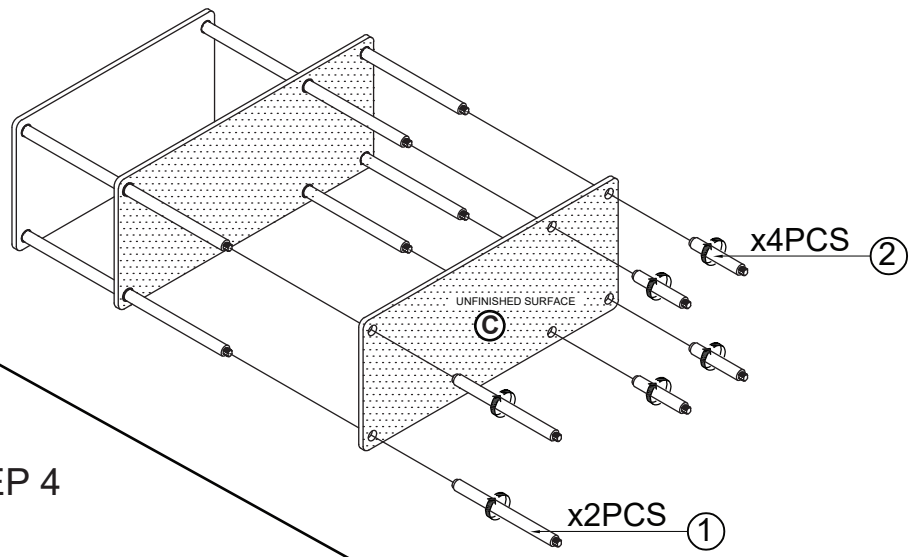

STEP 4

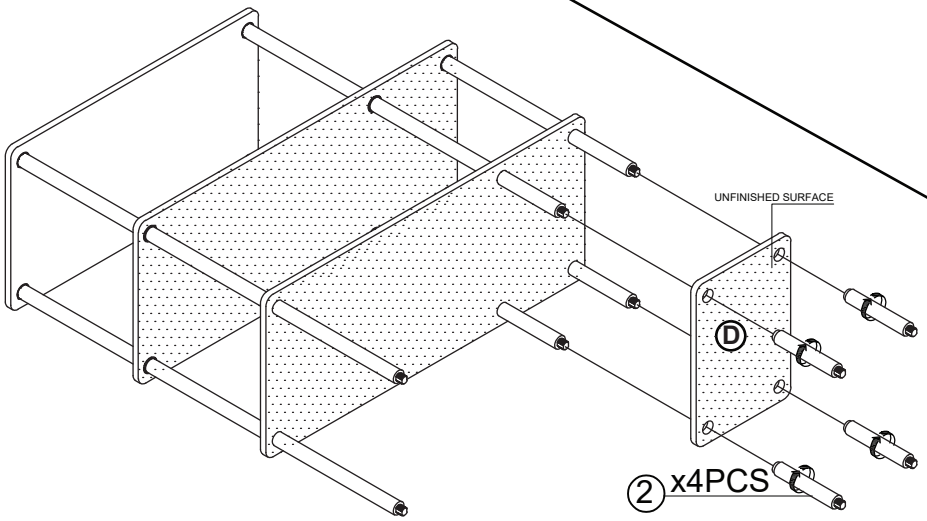

STEP 5

