Recommended Maximum Weight

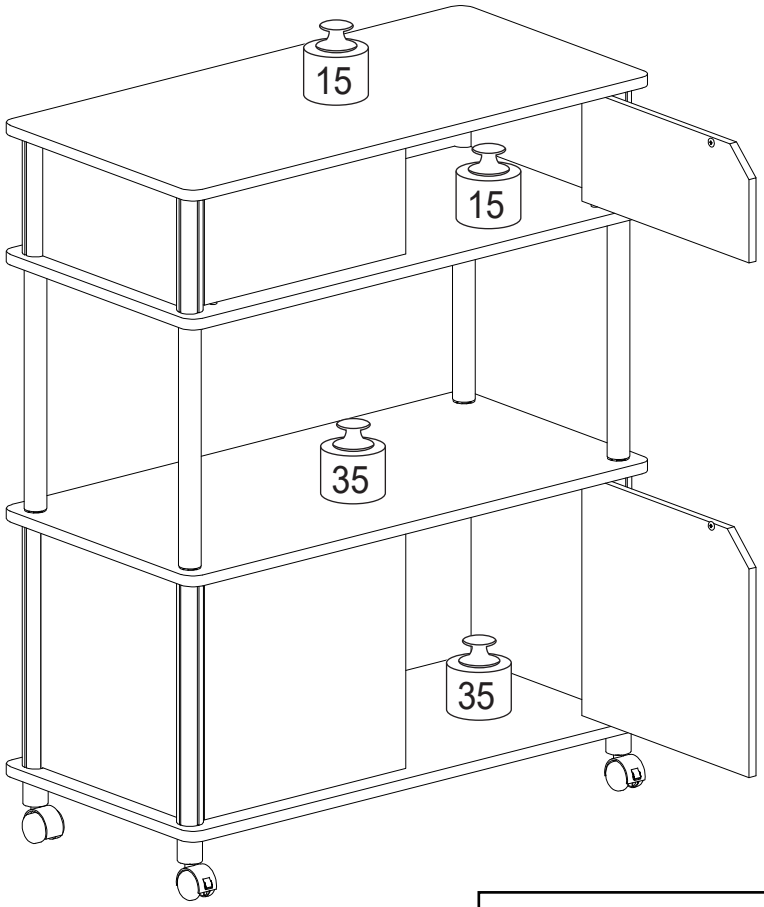

*Unit in Pound(lbs)

WARNING:

>This unit has been designed to support the maximum loads shown. Exceeding these load limits could cause sagging, instability, product collapse, and/or serious injury.

>DO NOT allow children to climb on unit.

>Put heavier items on lower shelves.

Furinno®
Fits Space. Fits Budget

Assembly Instruction

Furinno Turn - N - Tube Toolless Storage Cart with Cabinet

MODEL : **21030**

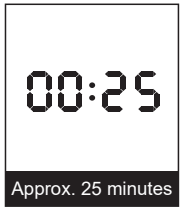





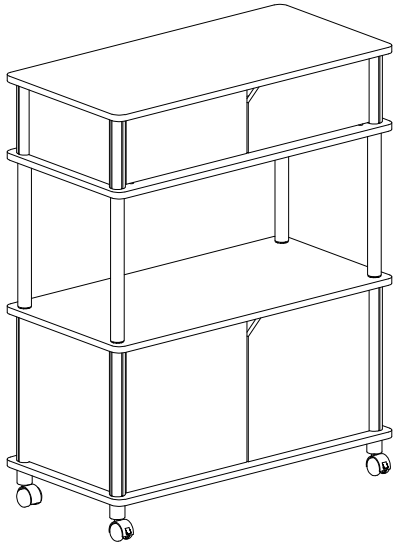

Customer Support

NEED HELP? For replacement requests or product inquiries, please contact our Customer Service Team by emailing us at **support@furinno.com**. Thank you for selecting Furinno!

www.furinno.com

2103020210412

HARDWARE AND PART LIST

NO	HARDWARE LIST	QTY
1	LONG ROUND POLE	4 PCS
2	SHORT ROUND POLE with GROOVE	4 PCS
3	LONG ROUND POLE with GROOVE	4 PCS
4	DOOR SPRING	8 PCS
5	MAGNET	4 PCS
6	FLAT HEAD SCREW	4 PCS
7	MDF SUPPORT	4 PCS
8	ROUND LEG + CASTOR LOCK	2 SETS
9	ROUND LEG + CASTOR	2 SETS

NO	PART LIST	QTY
A	TOP PANEL	1 PC
B	2ND SHELF / BOTTOM PANEL	2 PCS
C	3RD SHELF	1 PC
D	UPPER SIDE PANEL	2 PCS
E	UPPER BACK PANEL	1 PC
F	UPPER LEFT DOOR PANEL	1 PC
G	UPPER RIGHT DOOR PANEL	1 PC
H	LOWER SIDE PANEL	2 PCS
I	LOWER BACK PANEL	1 PC
J	LOWER LEFT DOOR PANEL	1 PC
K	LOWER RIGHT DOOR PANEL	1 PC

FRONT VIEW

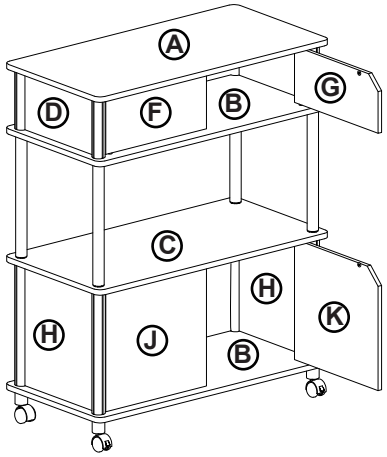

BACK VIEW

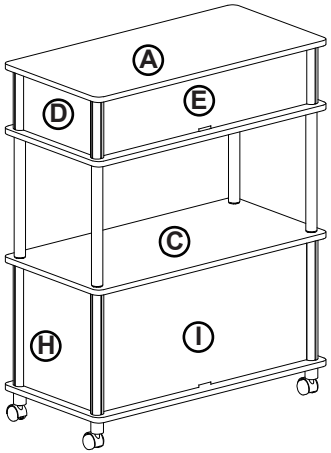

USEFUL HINTS BEFORE YOU START:

1. Read each step carefully before starting.
2. It is important that each step is performed in correct order to avoid difficulties.
3. Identify, sort and count the parts before assembly.
4. Assemble your furniture on packaging cardboard to prevent scratch or damage.
5. Clean the product with mild cleanser using soft damped cloth. Do not use harsh or abrasive cleanser.
6. Using uncompatible hardware might cause damage to product.

STEP 7

*repeat for right door

STEP 7.2

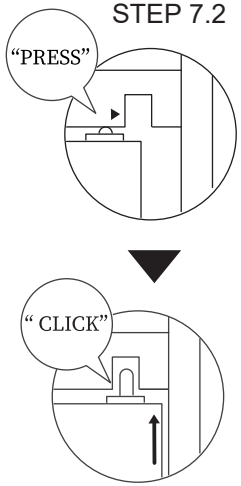

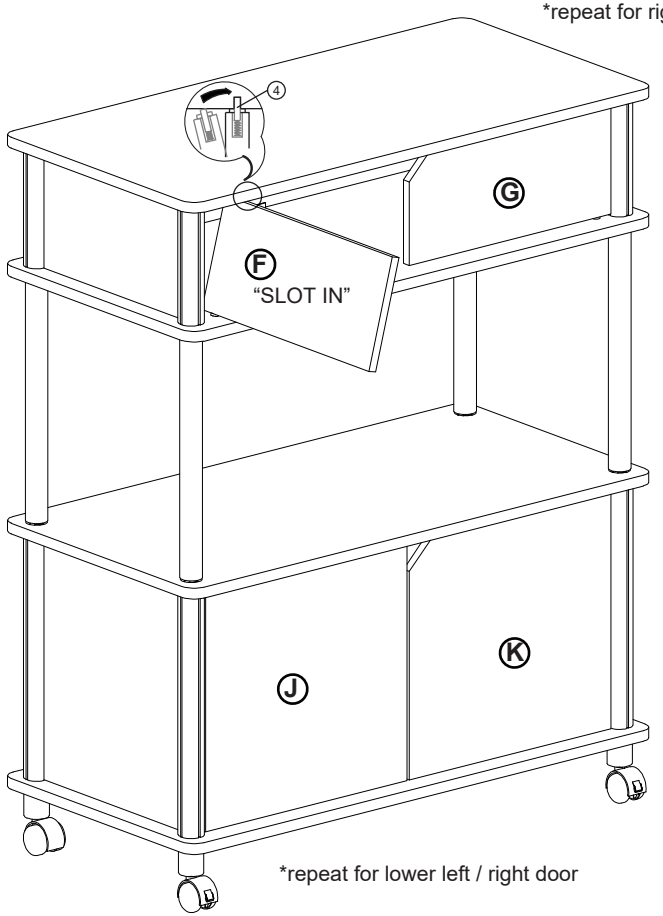

*repeat for lower left / right door

STEP 6

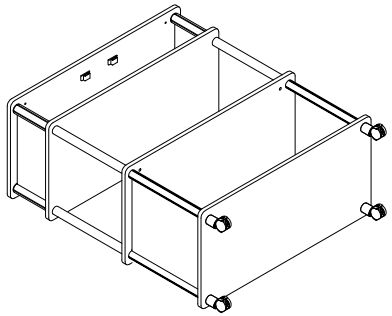

TURN 90°

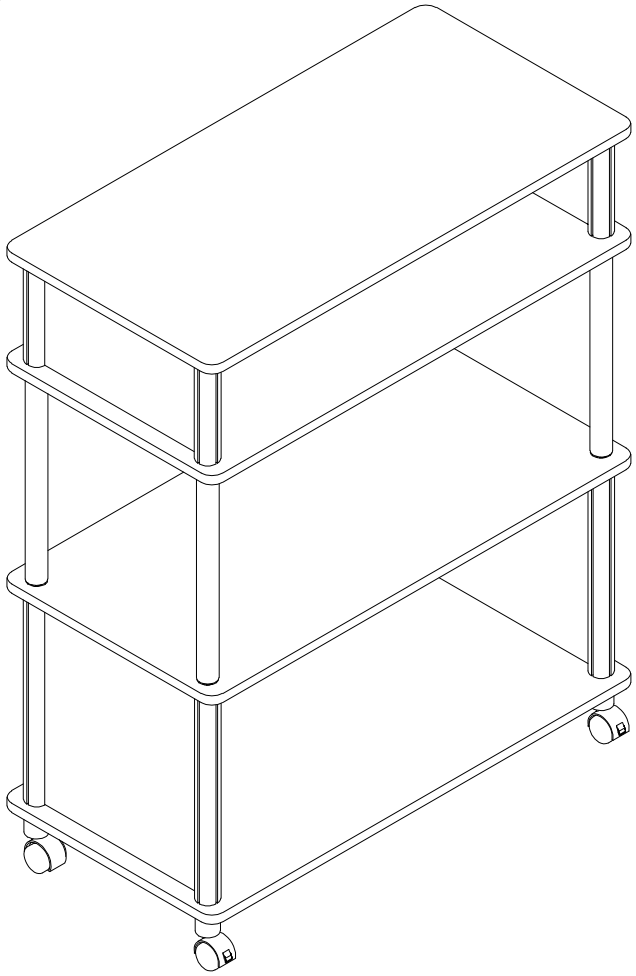

STEP 1

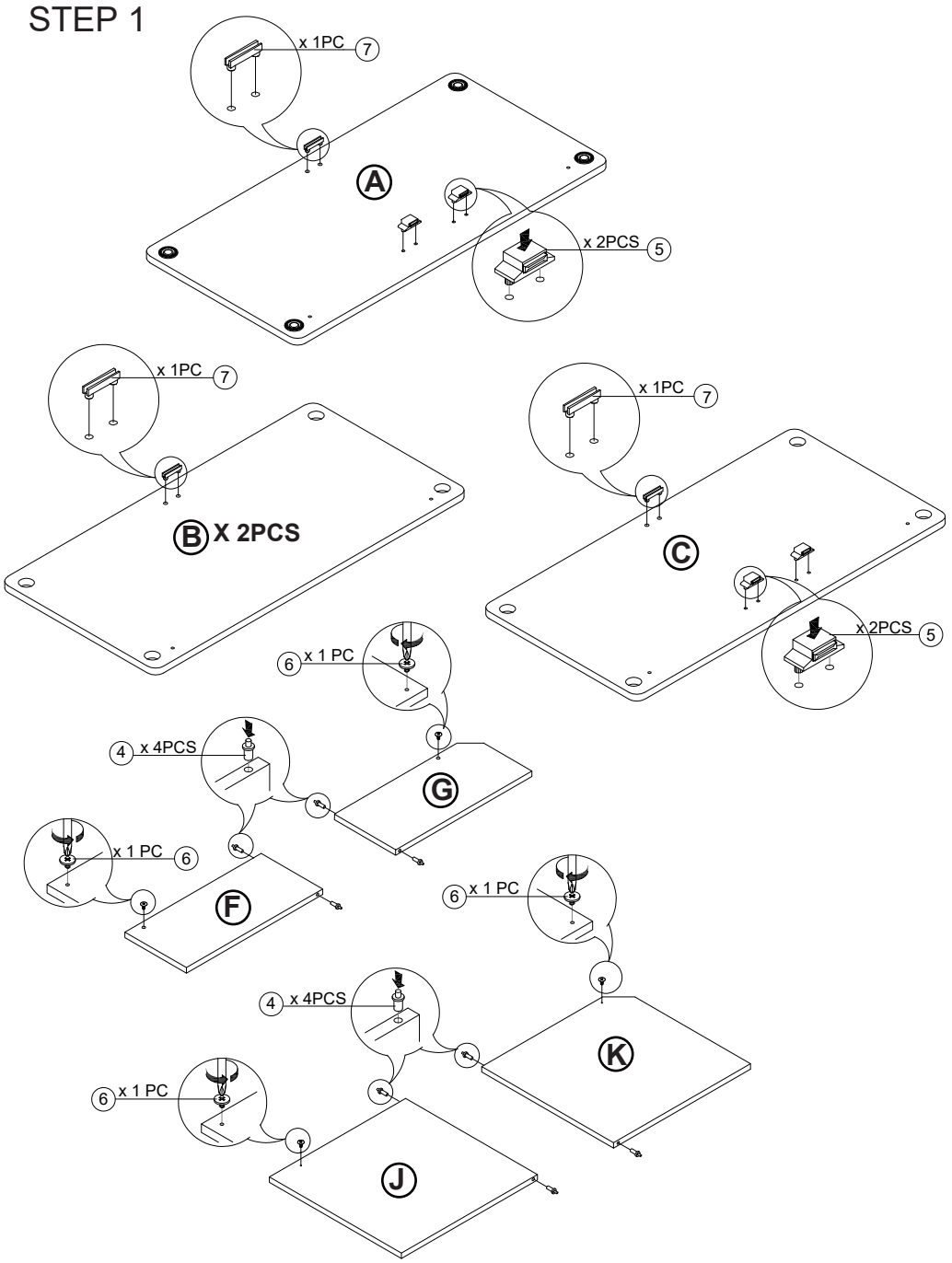

STEP 2

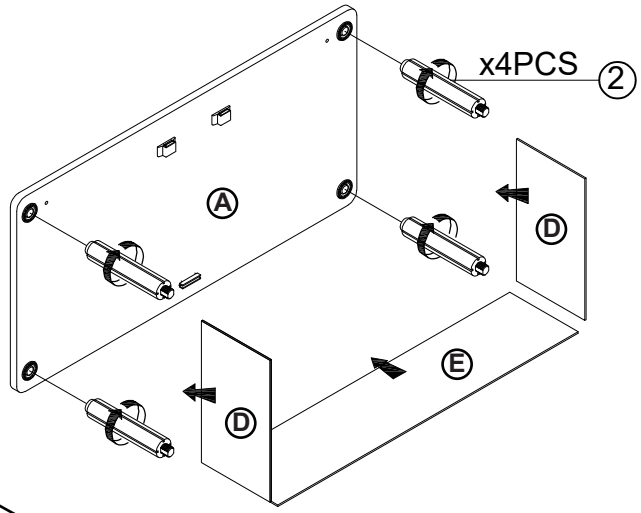

STEP 3

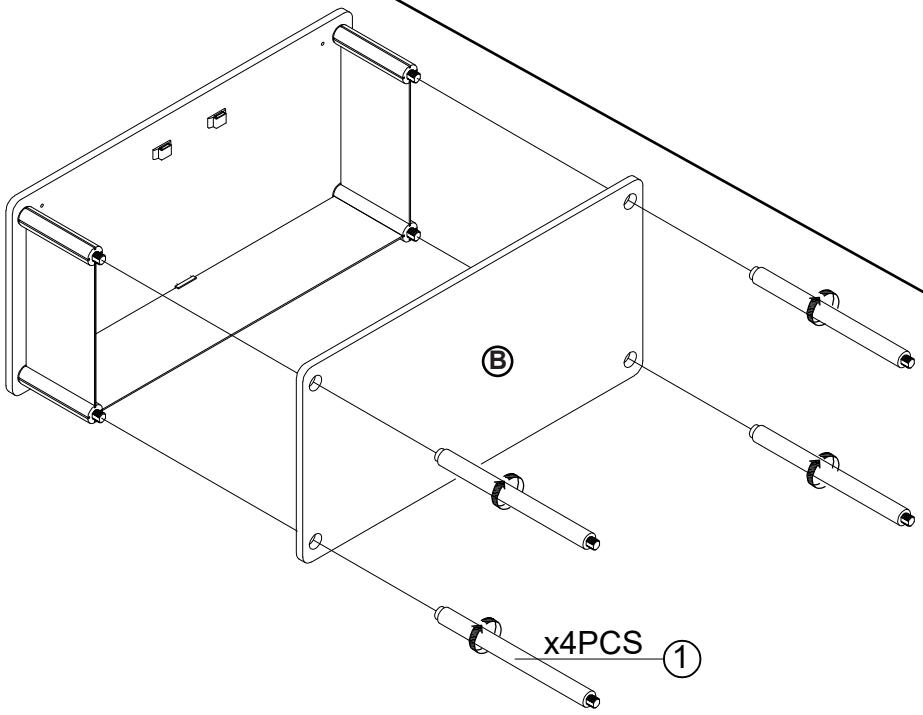

STEP 4

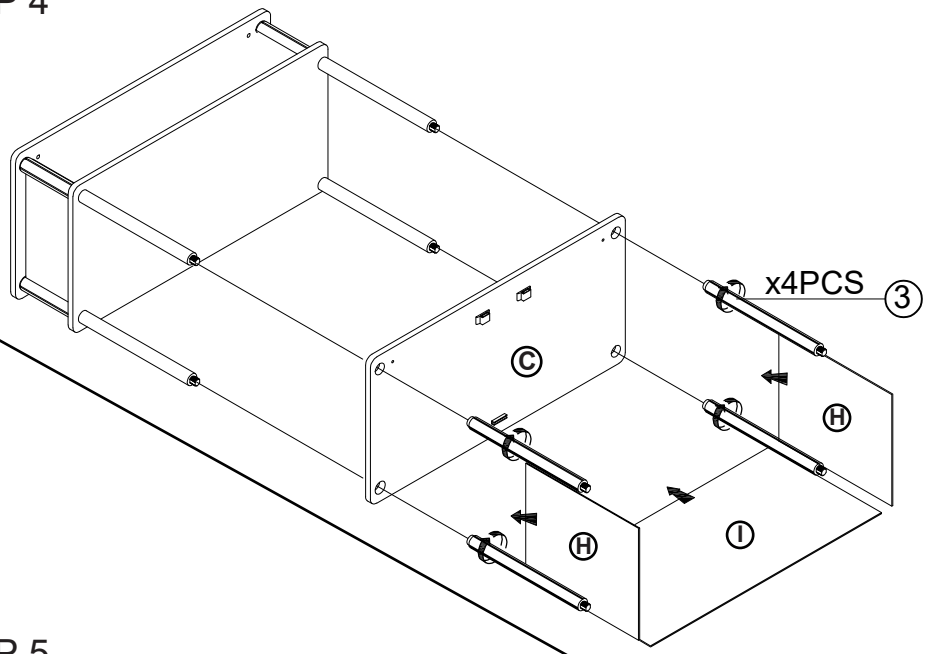

STEP 5

