Recommended Maximum Weight

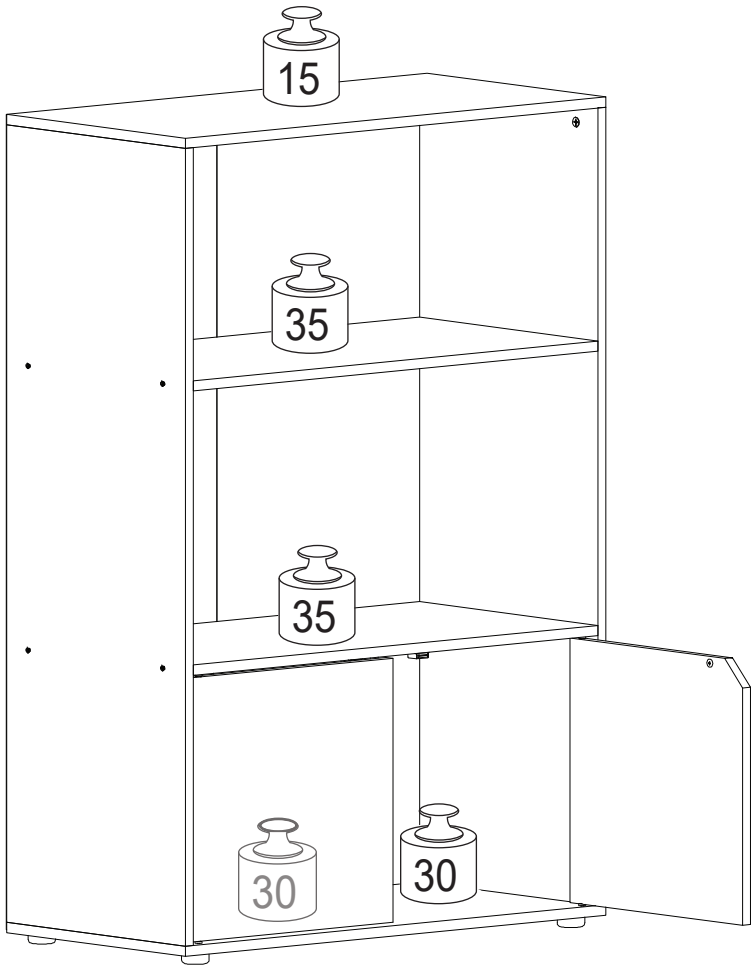

*Unit in Pound(lbs)

WARNING:

>This unit has been designed to support the maximum loads shown. Exceeding these load limits could cause sagging, instability, product collapse, and/or serious injury.

>DO NOT allow children to climb on unit.

>Put heavier items on lower shelves.

Furinno®
Fits Space. Fits Budget

Assembly Instruction

Furinno JAYA Kitchen Storage Shelf with Cabinet

MODEL : **21031**

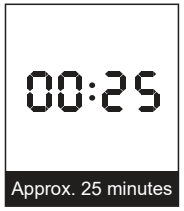

Approx. 25 minutes



Recomm. 2 Person



Tools Required

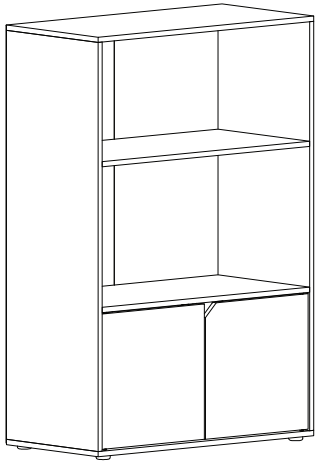

Customer Support

NEED HELP? For replacement requests or product inquiries, please contact our Customer Service Team by emailing us at **support@furinno.com**. Thank you for selecting Furinno!

www.furinno.com

2103120210329

HARDWARE AND PART LIST

NO	PART LIST	QTY
1	MINIFIX (1a) (1b)	4 SETS
2	POZIHEAD SCREW	12 PCS
3	DOWEL	4 PCS
4	DOOR SPRING	4 PCS
5	MAGNET	2 PCS
6	FLAT HEAD SCREW	2 PCS
7	PVC PLUG LEG	4 PCS
8	POWER PIN	32 PCS

NO	PART LIST	QTY
A	SIDE LEFT PANEL	1 PC
B	SIDE RIGHT PANEL	1 PC
C	TOP SHELF PANEL	1 PC
D	2ND SHELF PANEL	1 PC
E	3RD SHELF PANEL	1 PC
F	DOOR RIGHT PANEL	1 PC
G	DOOR LEFT PANEL	1 PC
H	CENTER PANEL	1 PC
I	BOTTOM PANEL	1 PC
J	BACK PANEL	2 PCS

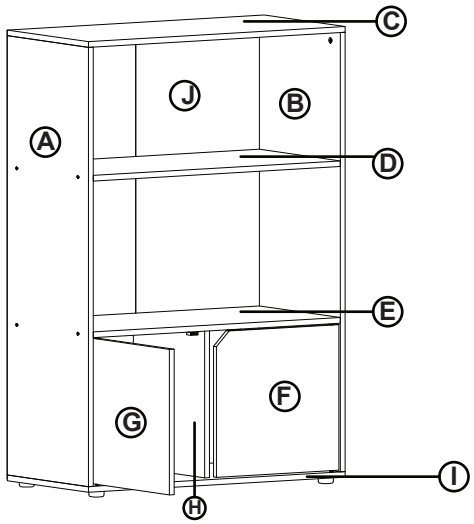

USEFUL HINTS BEFORE YOU START:

1. Read each step carefully before starting.
2. It is important that each step is performed in correct order to avoid difficulties.
3. Identify, sort and count the parts before assembly.
4. Assemble your furniture on packaging cardboard to prevent scratch or damage.
5. Clean the product with mild cleanser using soft damped cloth. Do not use harsh or abrasive cleanser.
6. Using uncompatible hardware might cause damage to product.

STEP 9

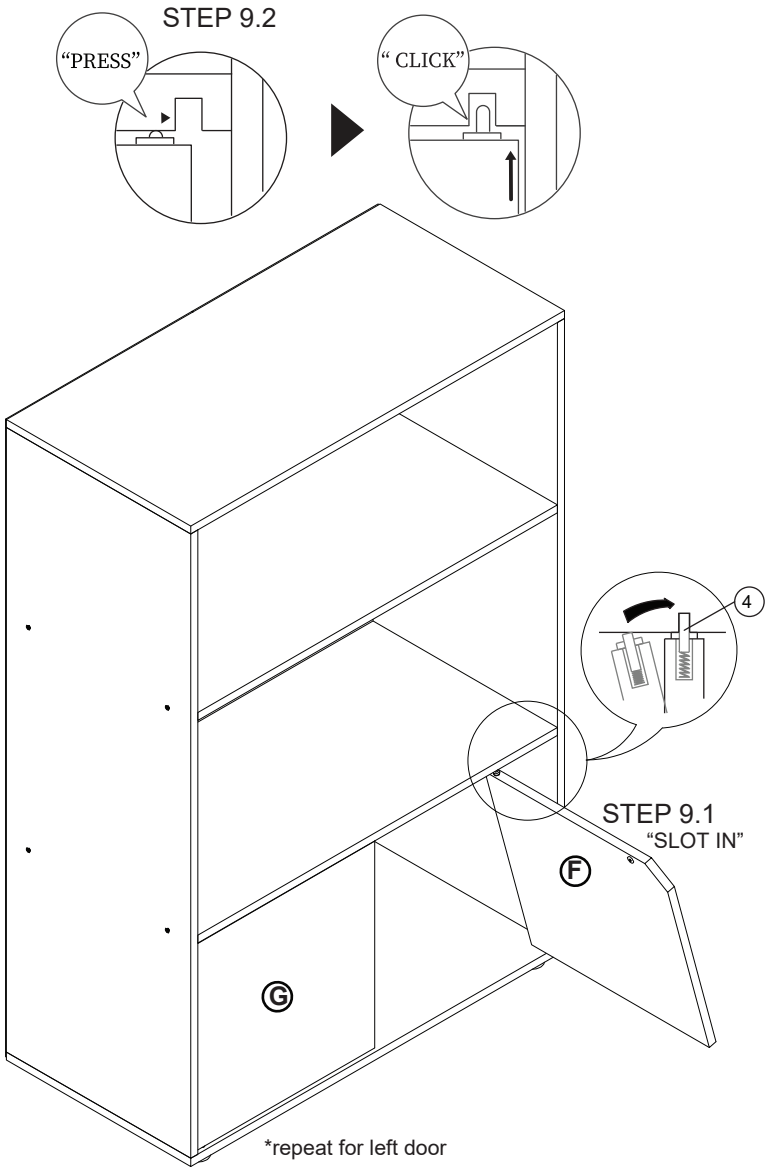

STEP 7

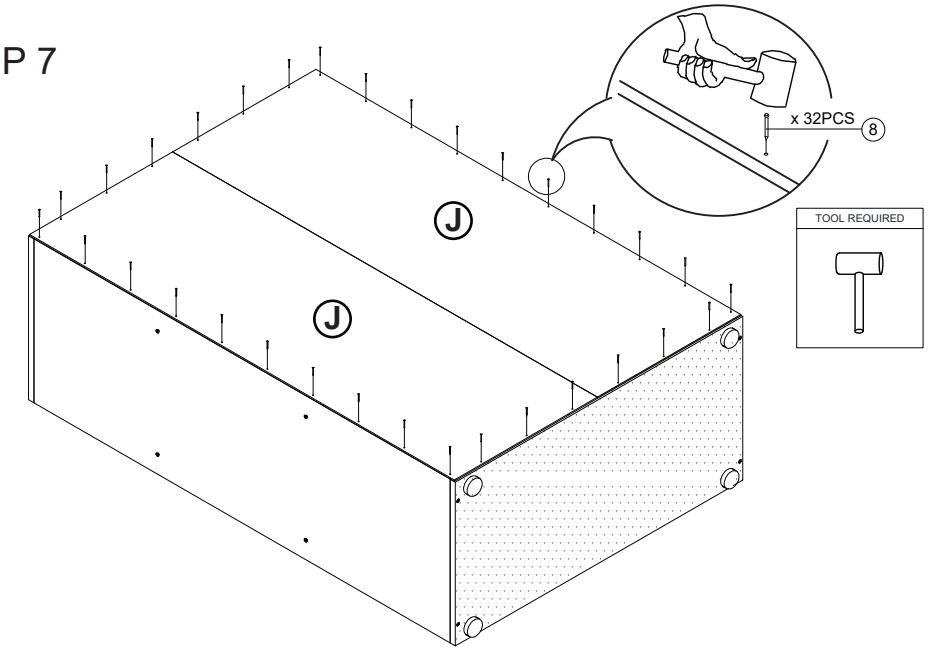

STEP 8

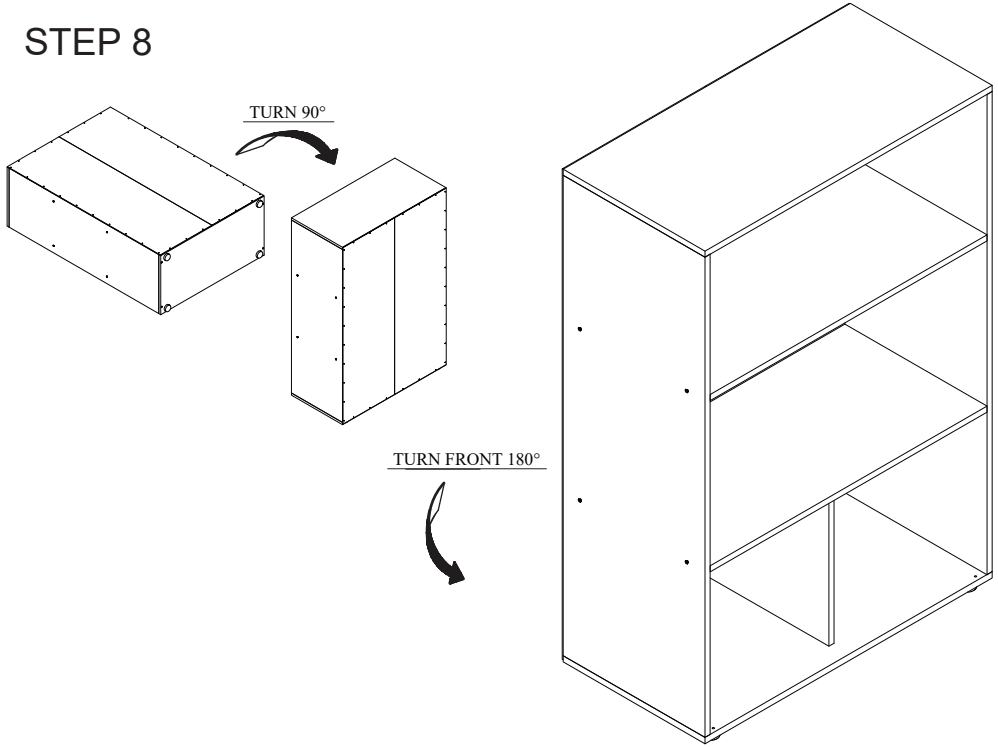

STEP 1

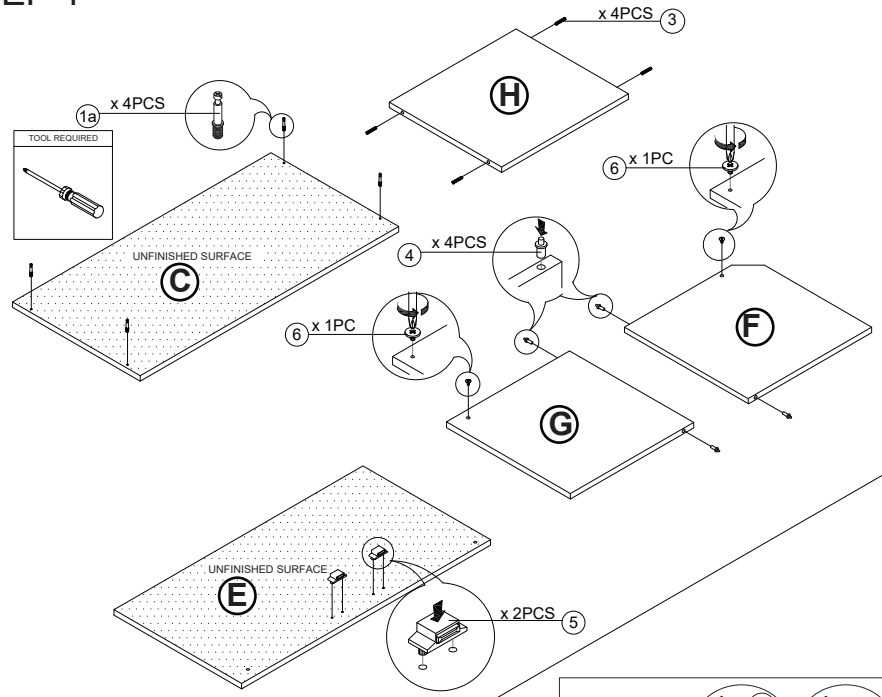

STEP 2

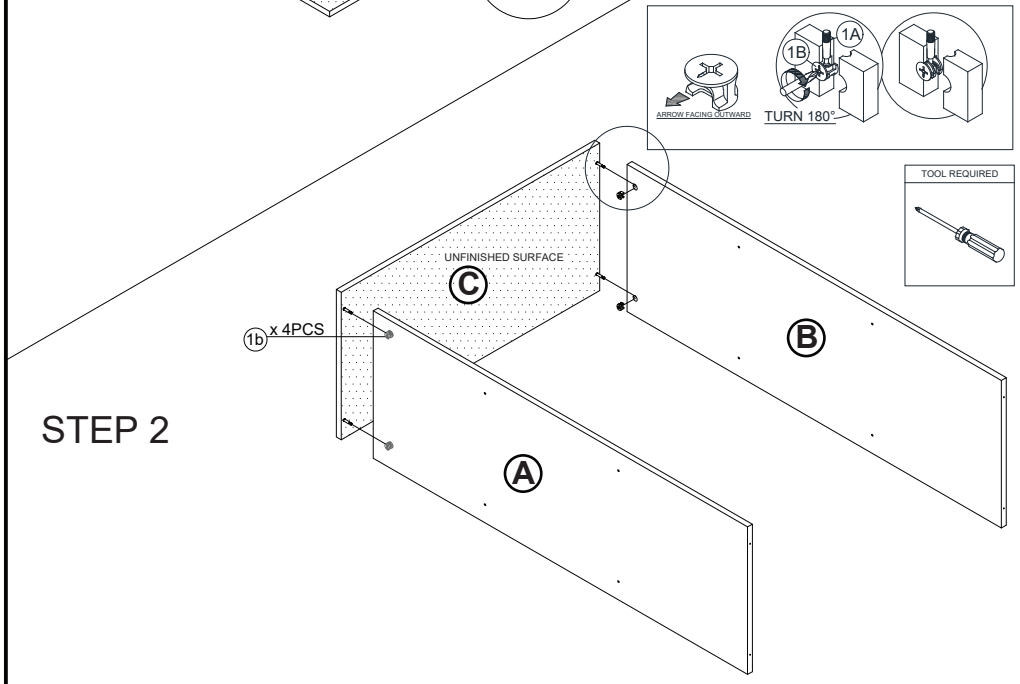

STEP 3

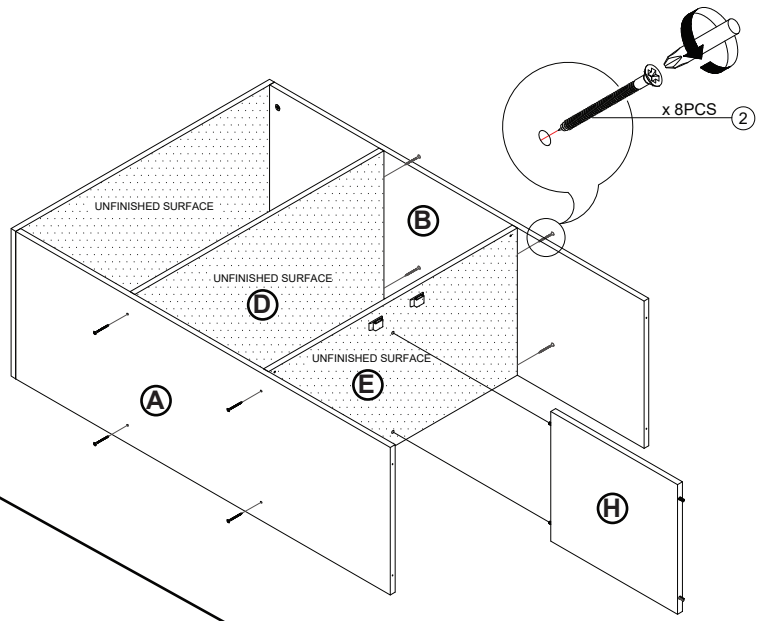

STEP 4

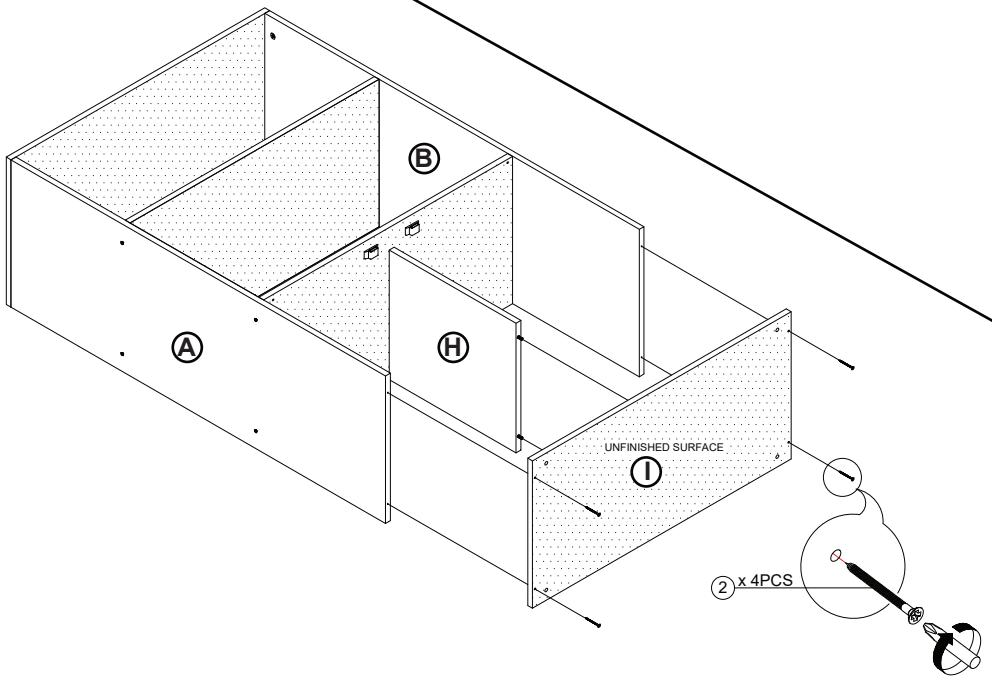

STEP 5

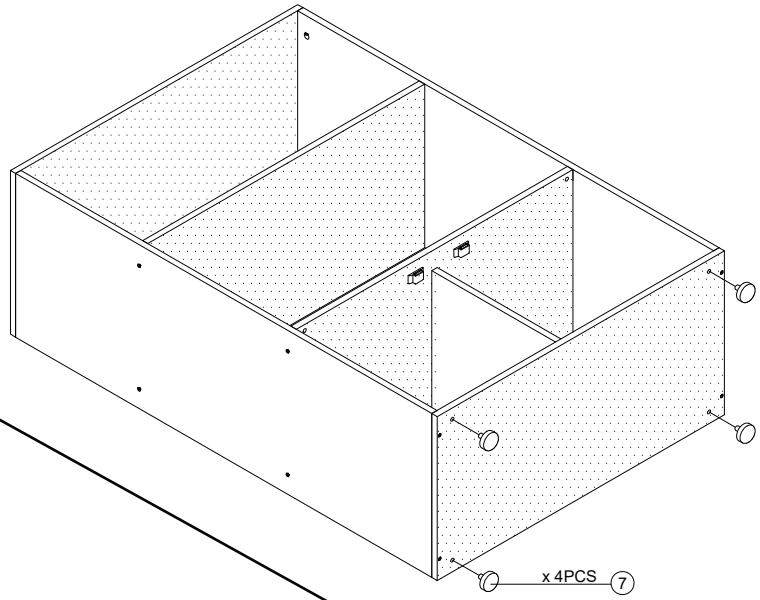

STEP 6

