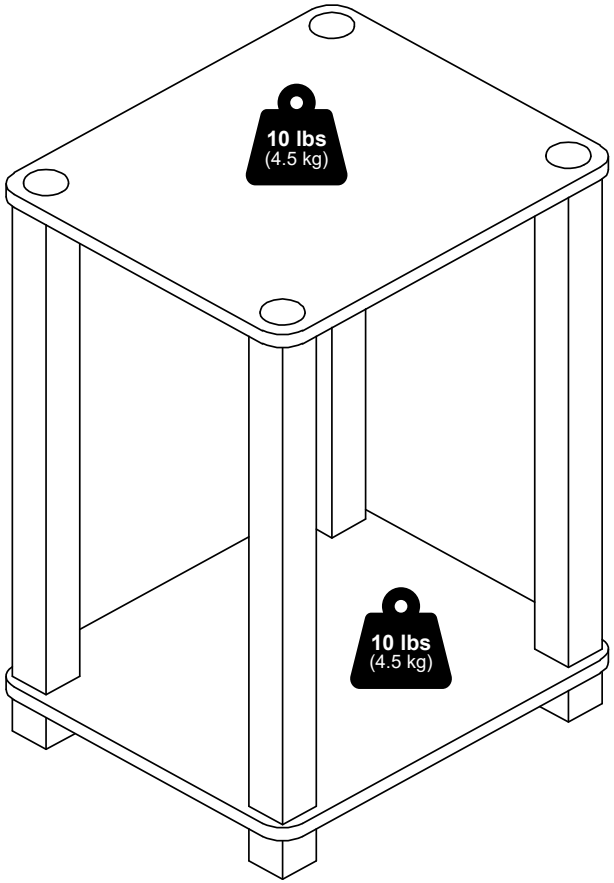

Furinno®

Fits Space, Fits Budget



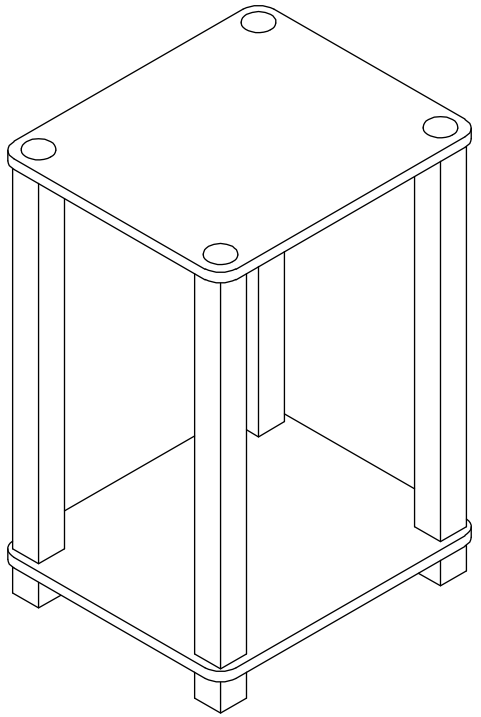

MODEL: 21260

support@furinno.com

www.furinno.com

2126020230609

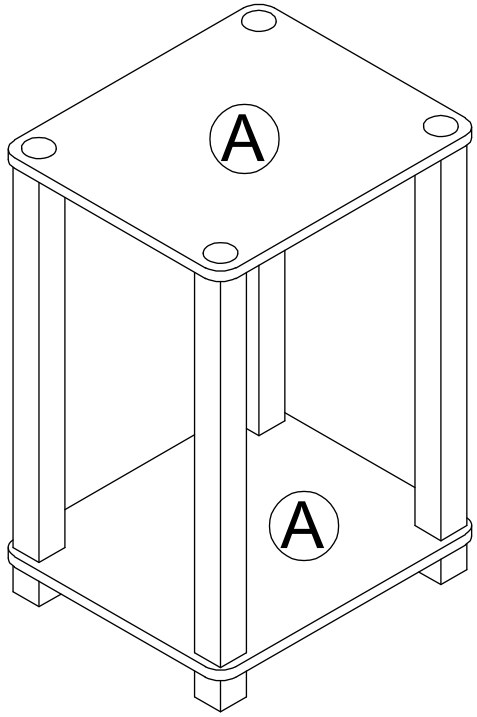

1 x 4 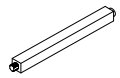	2 x 4 	3 x 4 
34 x 440mm	32 x 14mm	34 x 38mm

1

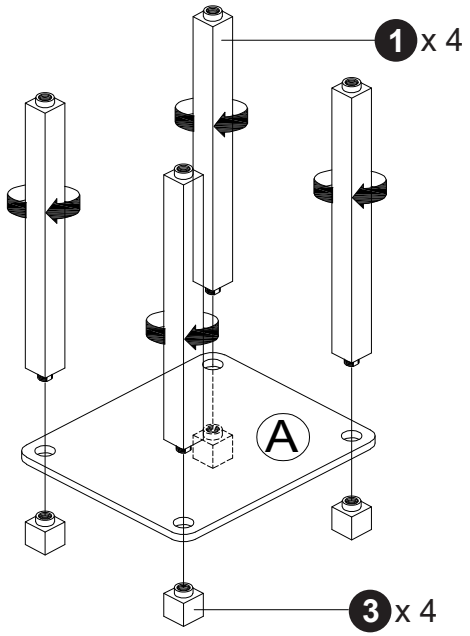

2

