STEP 12

⚠ WARNING

Keep out of Reach of Children.

Prevent serious injury from falls of Lift Top.
Always secure child in the restraint.

OPEN VIEW **CLOSE VIEW**

****hold both side**

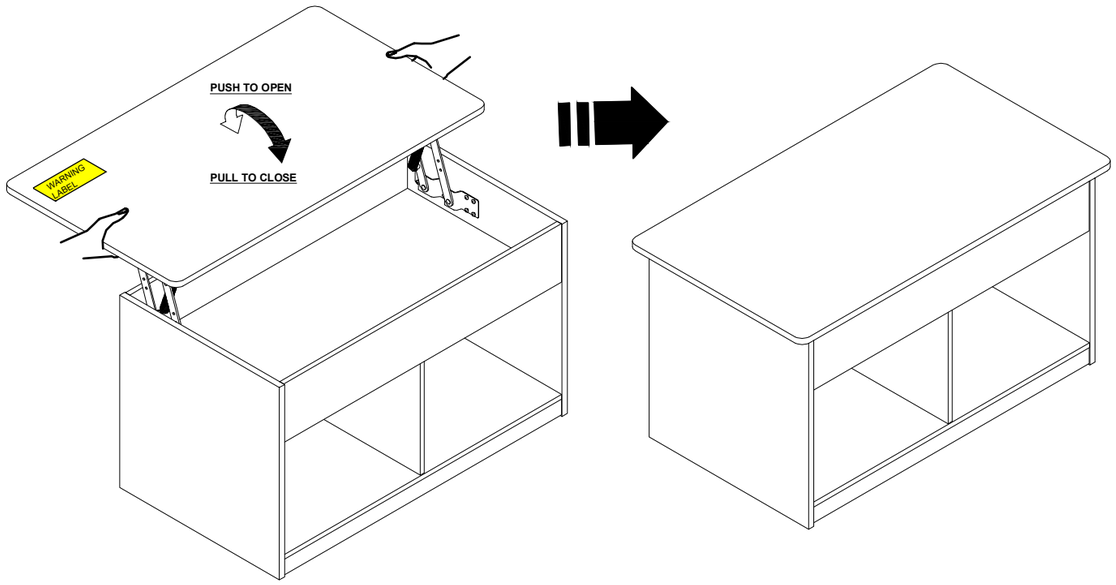

Recommended Maximum Weight

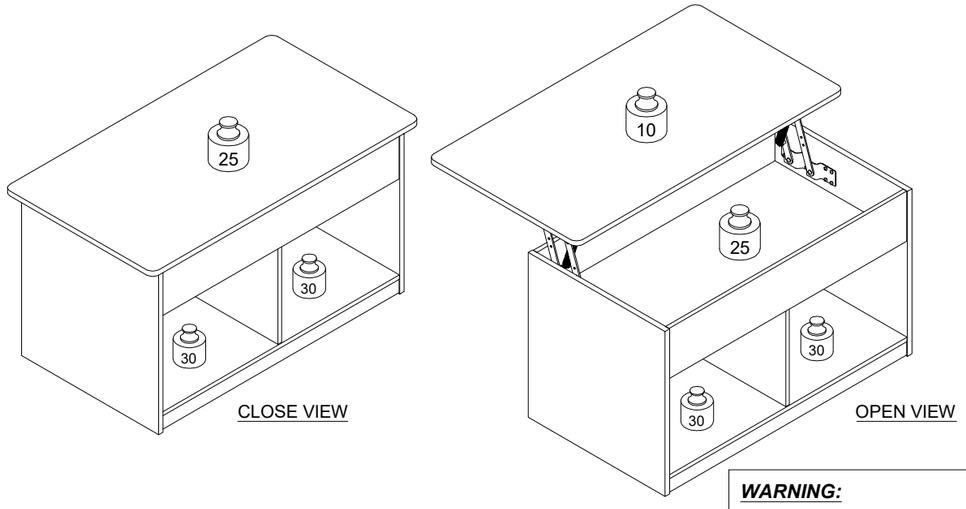

WARNING:

>This unit has been designed to support the maximum loads shown. Exceeding these load limits could cause sagging, instability, product collapse, and/or serious injury.

>DO NOT allow children to climb on unit.

> Put heavier items on lower shelves.

*Unit in Pound(lbs.)

Furinno®

Fits Space, Fits Budget

Assembly Instruction

Furinno Lift Top Coffee Table.

MODEL : **21281**

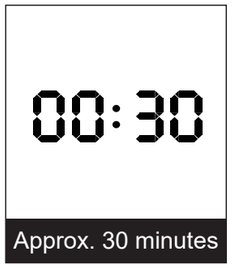

Approx. 30 minutes



Recomm. 2 Person



Tools Required

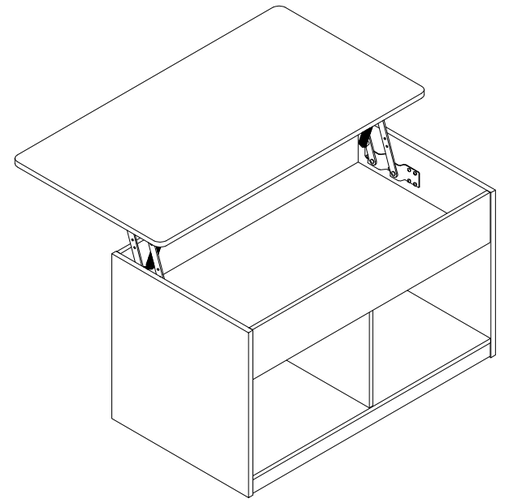

Customer Support

NEED HELP? For replacement requests or product inquiries, please contact our Customer Service Team by emailing us at **support@furinno.com**. Thank you for selecting Furinno!

www.furinno.com

2128120220531

HARDWARE & PARTS LIST

NO	HARDWARE LIST	QTY
1	MINIFIX 	18pcs
2	WOOD DOWEL 	24pcs
3	POZIHEAD SCREW 	2pcs
4	PWA C/B SCREW 	8pcs
5	L BRACKET 	4pcs
6	LIFT TOP BRACKET 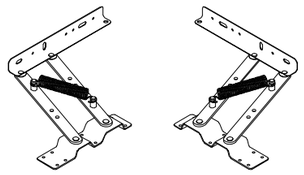	1sets
7	TRUS HEAD SCREW 	18pcs
8	RUBBER PAD 	4pcs

NO	PART LIST	QTY
A	LIFT TOP	1pc
B	LEFT SIDE PANEL	1pc
C	RIGHT SIDE PANEL	1pc
D	KICK PANEL	2pcs
E	PARTITION PANEL	1pc
F	BOTTOM PANEL	1pc
G	COVER PANEL	2pcs
H	FIXED SHELF PANEL	1pc

OPEN VIEW

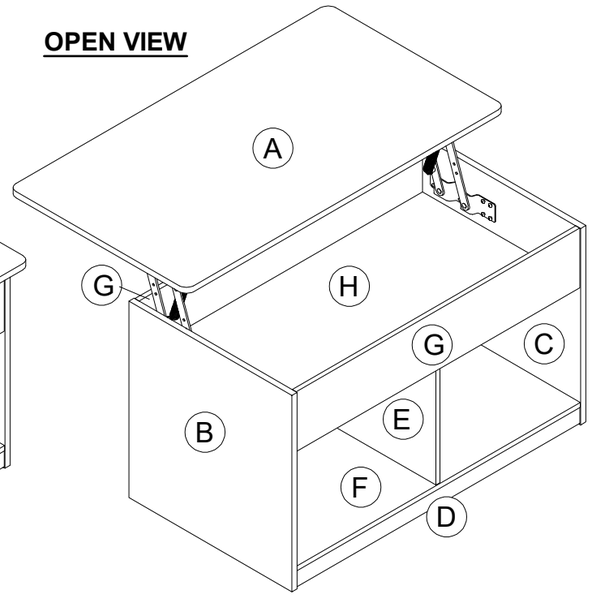

CLOSE VIEW

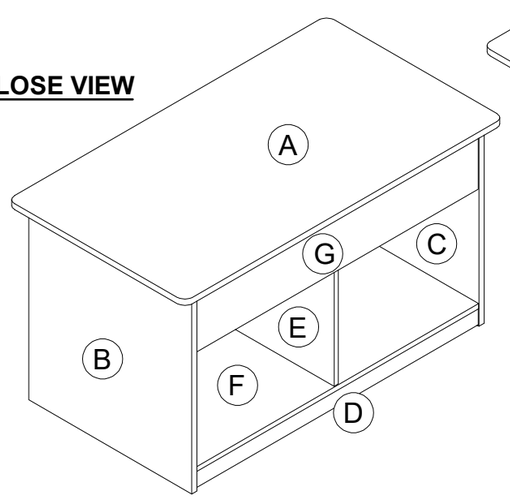

USEFUL HINTS BEFORE YOU START:

1. Read each step carefully before starting.
2. It is important that each step is performed in correct order to avoid difficulties.
3. Identify, sort and count the parts before assembly.
4. Assemble your furniture on packaging cardboard to prevent scratch or damage.
5. Clean the product with mild cleanser using soft damped cloth. Do not use harsh or abrasive cleanser.
6. Using uncompatible hardware might cause damage to product.

STEP 11

Step 11.1

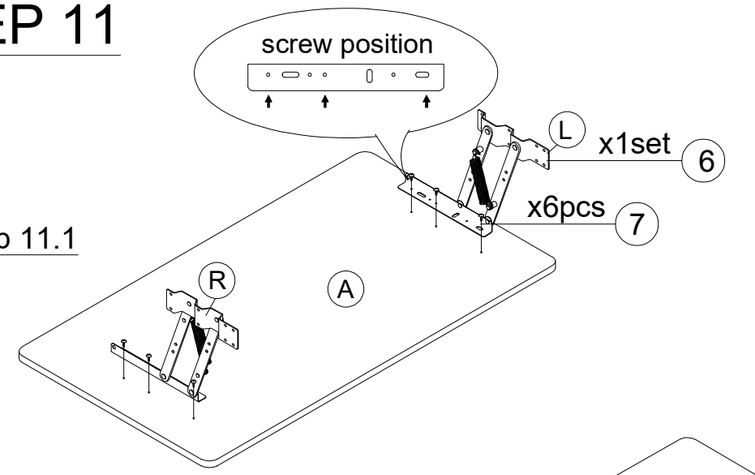

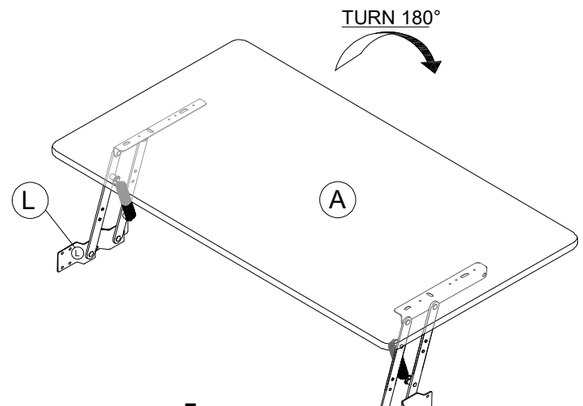

Step 11.2

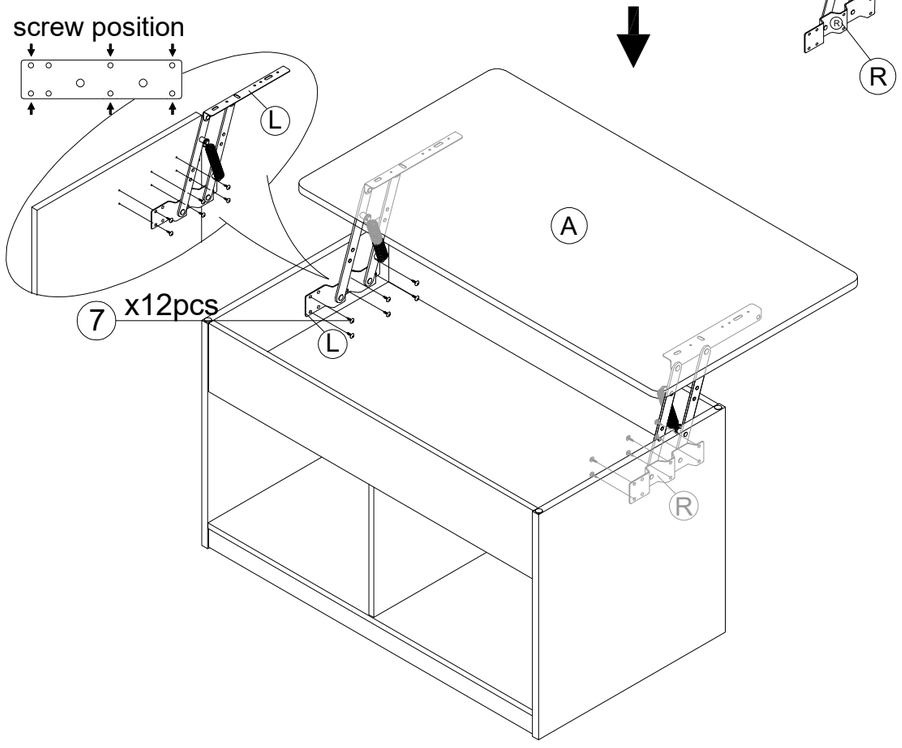

STEP 9

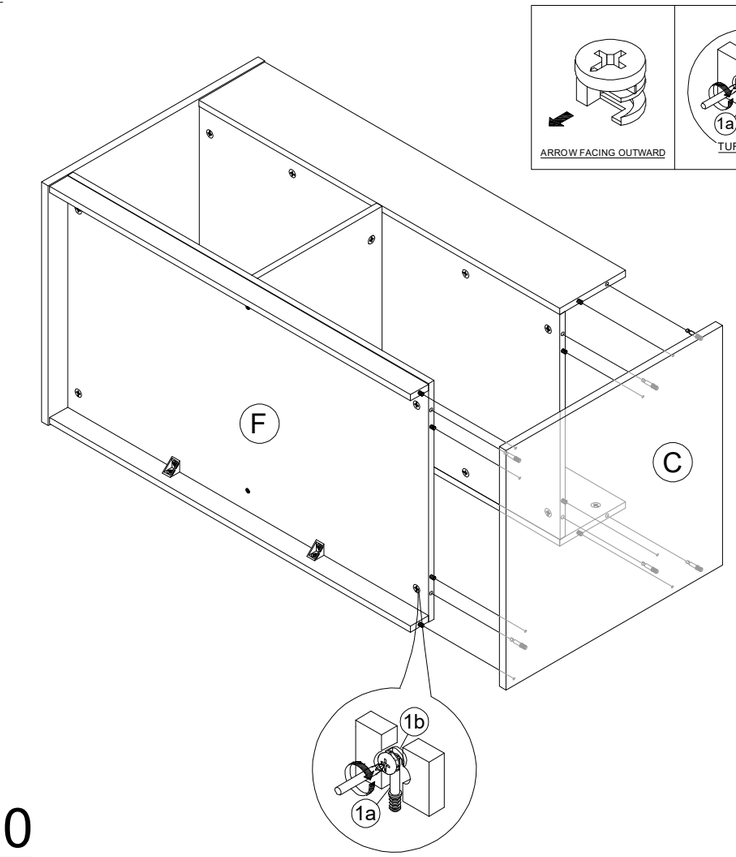

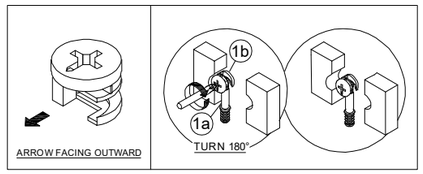

STEP 10

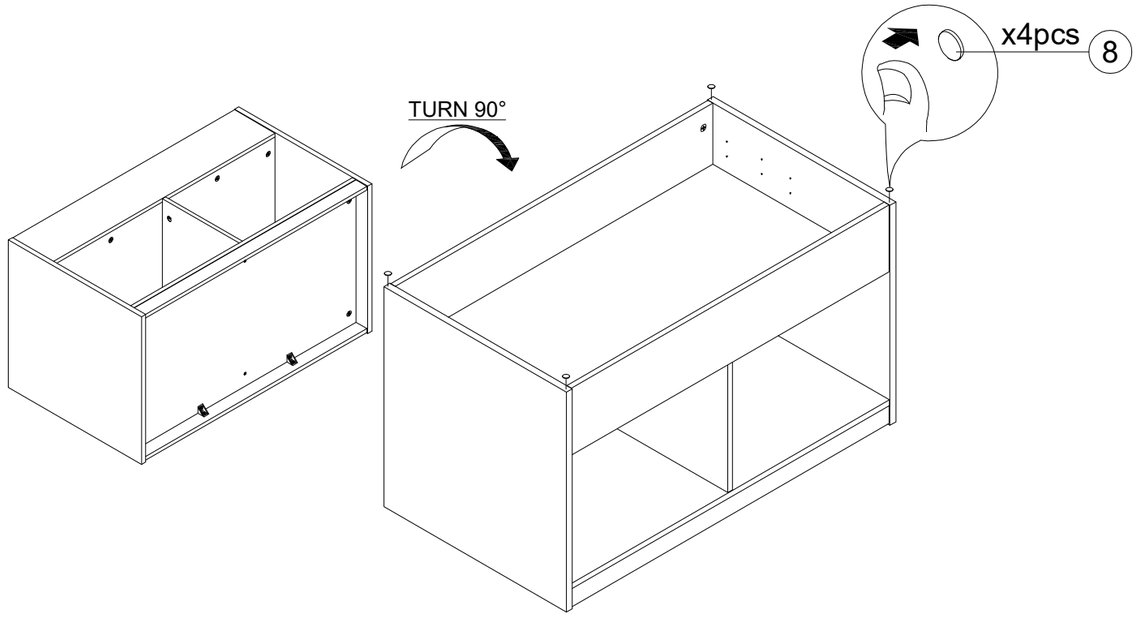

ASSEMBLY INSTRUCTIONS

BEFORE YOU BEGIN, PLEASE READ ASSEMBLY INSTRUCTIONS CAREFULLY, FOLLOW THEM STEP BY STEP.

STEP 1

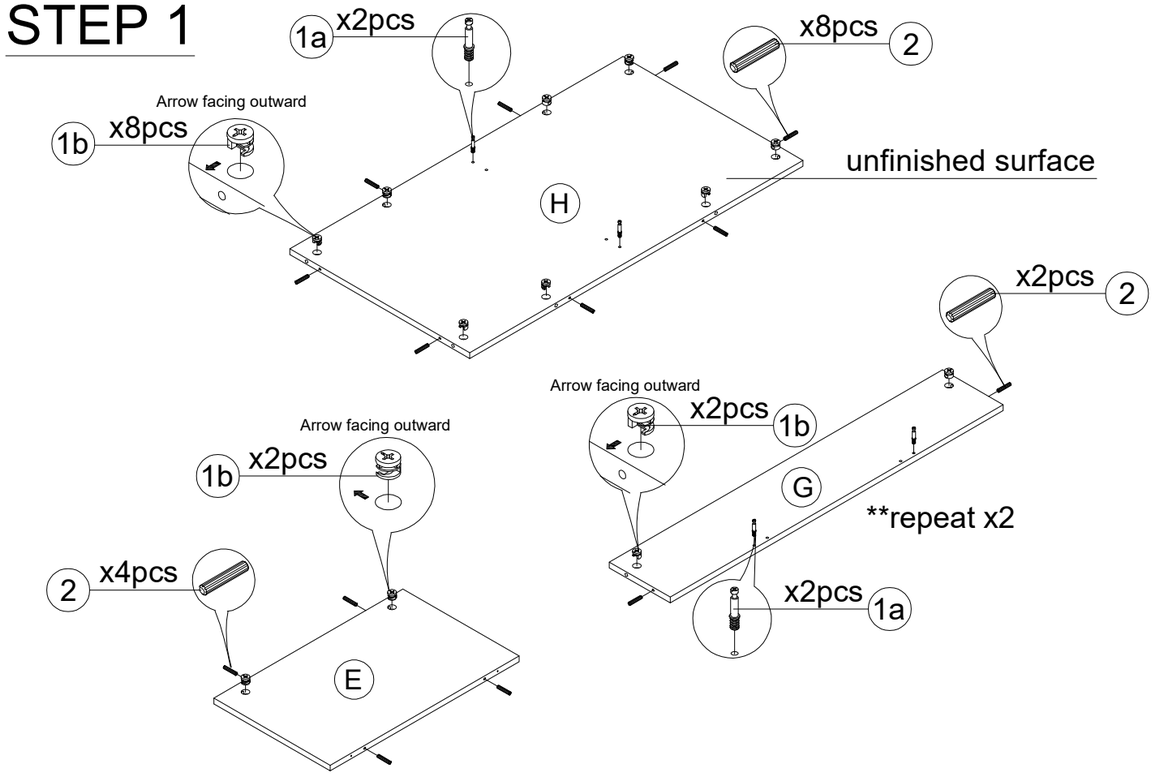

STEP 2

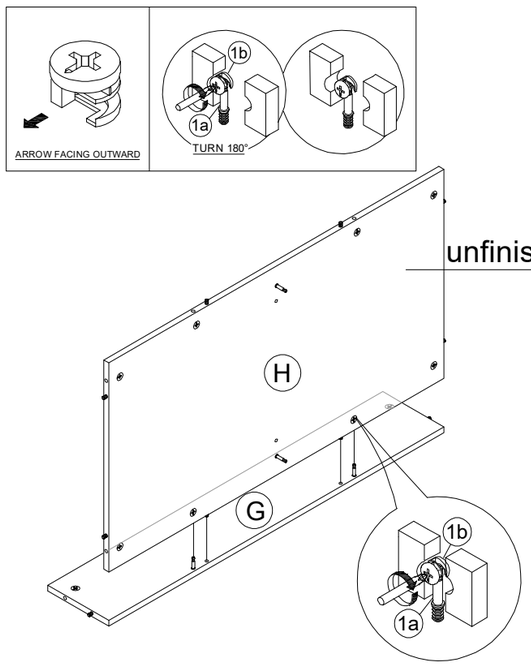

STEP 3

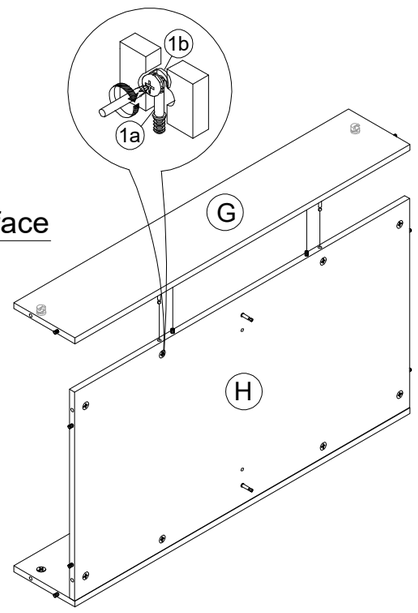

STEP 4

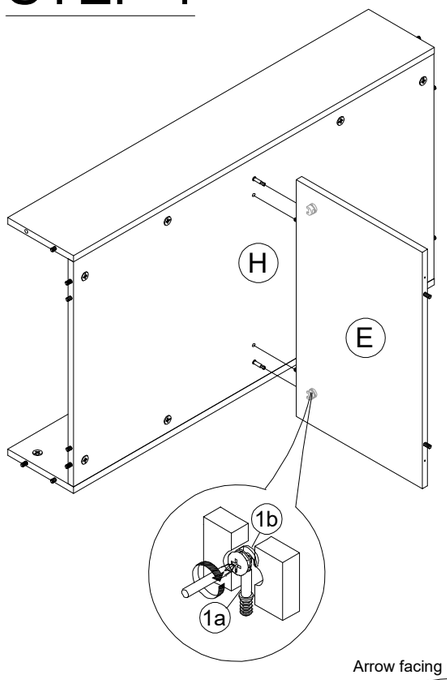

STEP 5

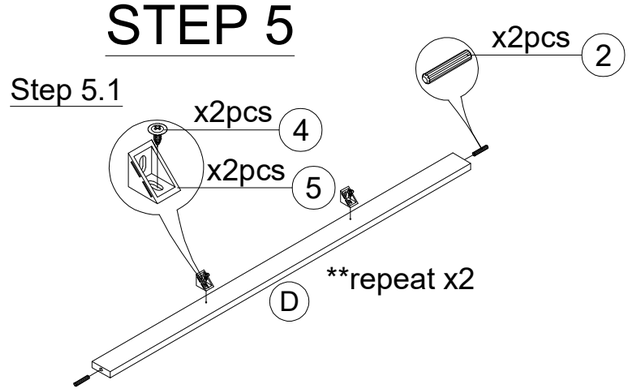

STEP 6

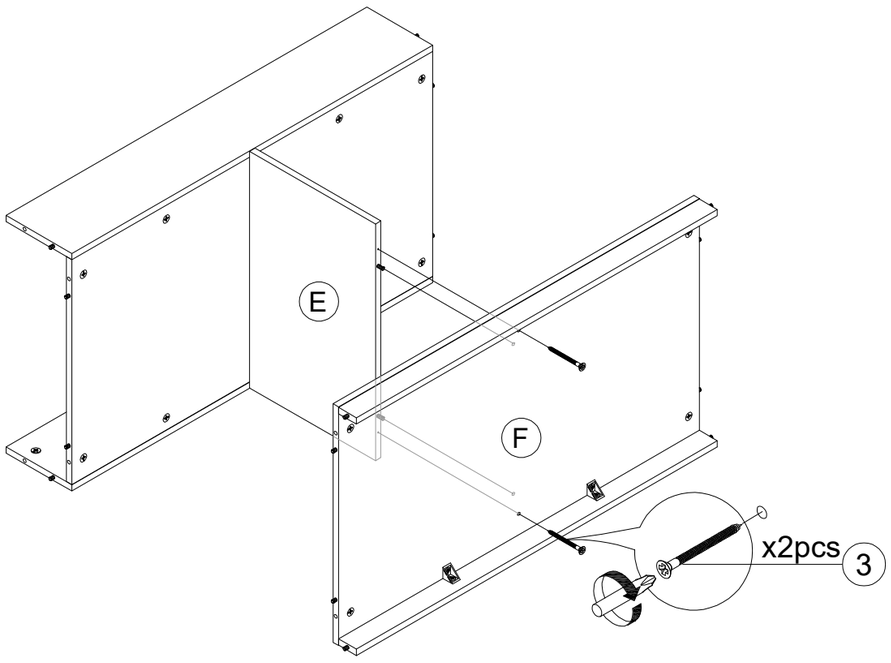

STEP 7

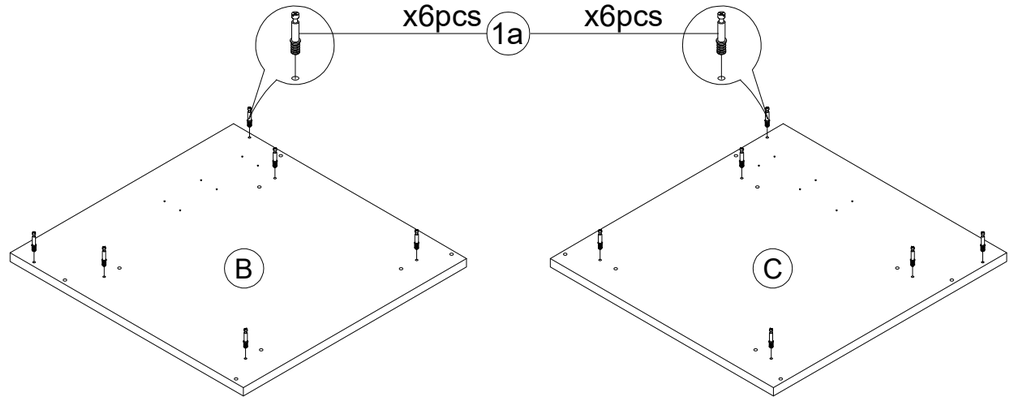

STEP 8

