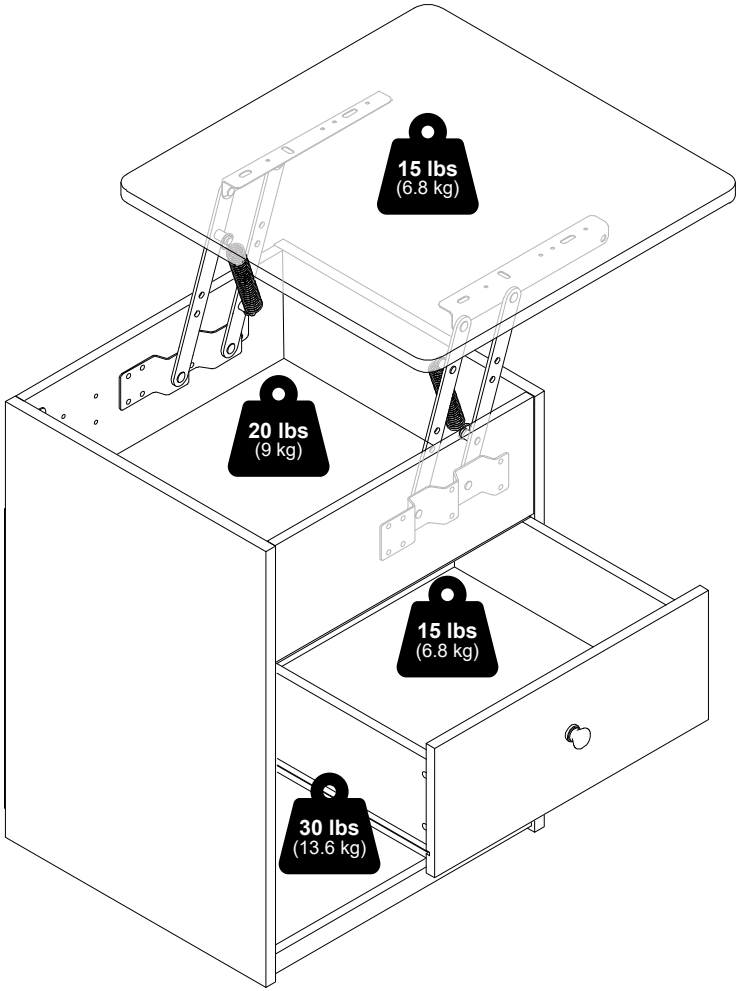

Furinno®

Fits Space, Fits Budget



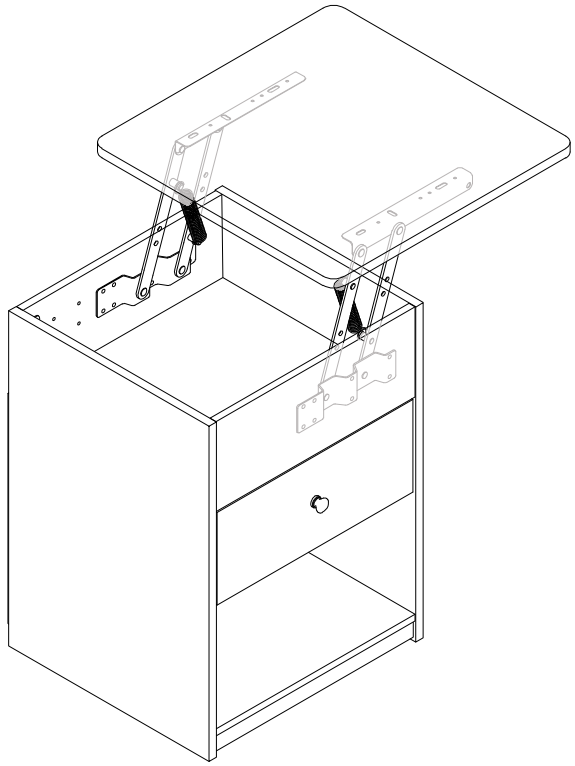

MODEL: 21294

support@furinno.com

www.furinno.com

2129420230526

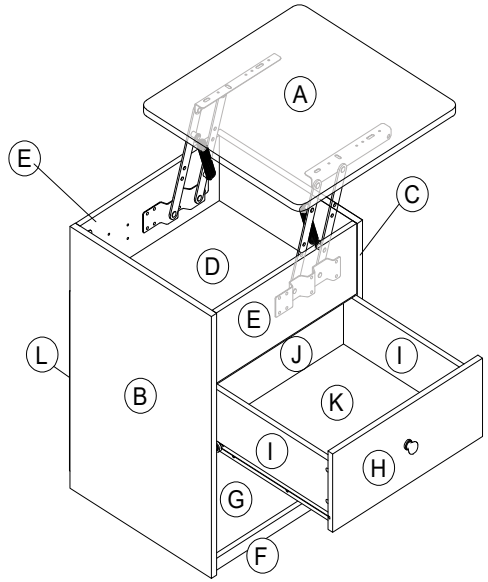

1 x 14 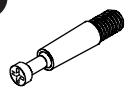 M6 X 31mm	**2** x 14  15mm	**3** x 16  M6 X 30mm	**4** x 16  M4 x 11mm
5 x 4 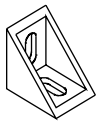 17 X 22mm	**6** x 1 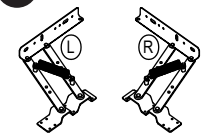	**7** x 18  M4 x 14mm	**8** x 4  10 x 1.7mm
9 x 12 M3.5 x 12mm	**10** x 1  24 x 22mm	**11** x 1 M3.6 x 19mm	**12** x 2  64mm
13 x 4 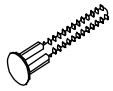	**14** x 14  2.5 x 18mm	**15** x 1 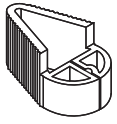	**16** x 1 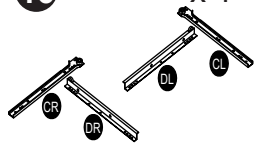

14

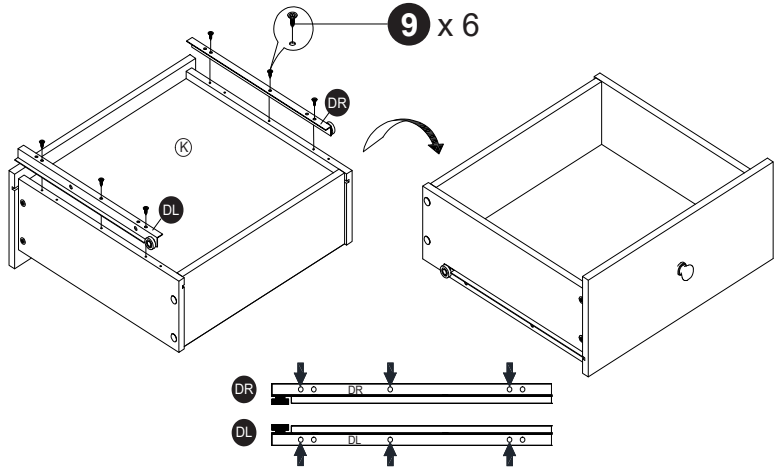

15

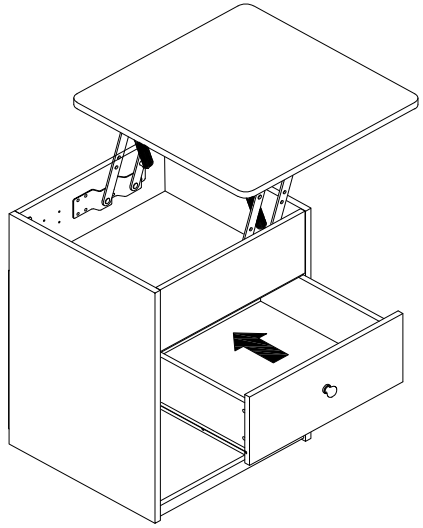

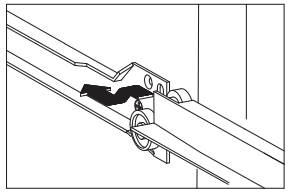

12

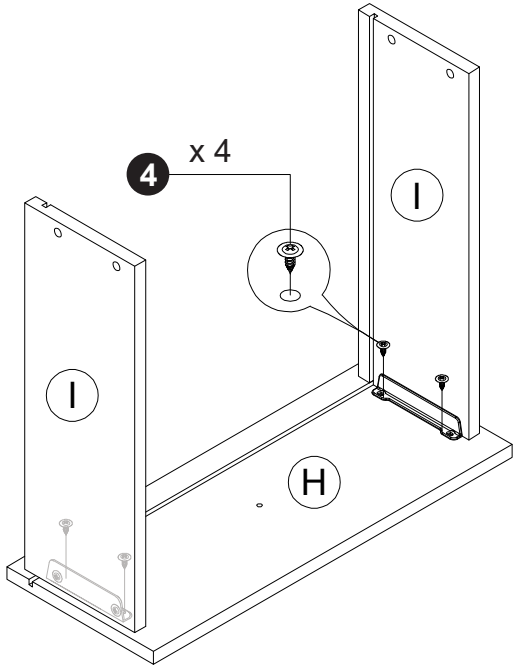
4 x 4
I
I
H

13

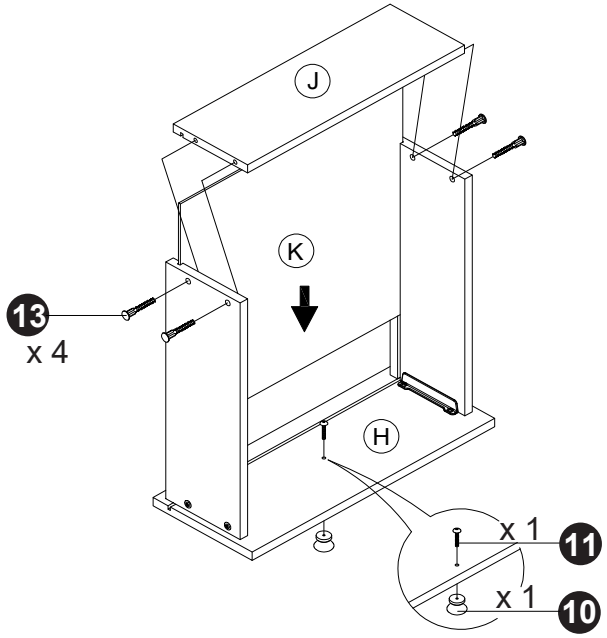
J
K
13
x 4
H
x 1
11
x 1
10

1

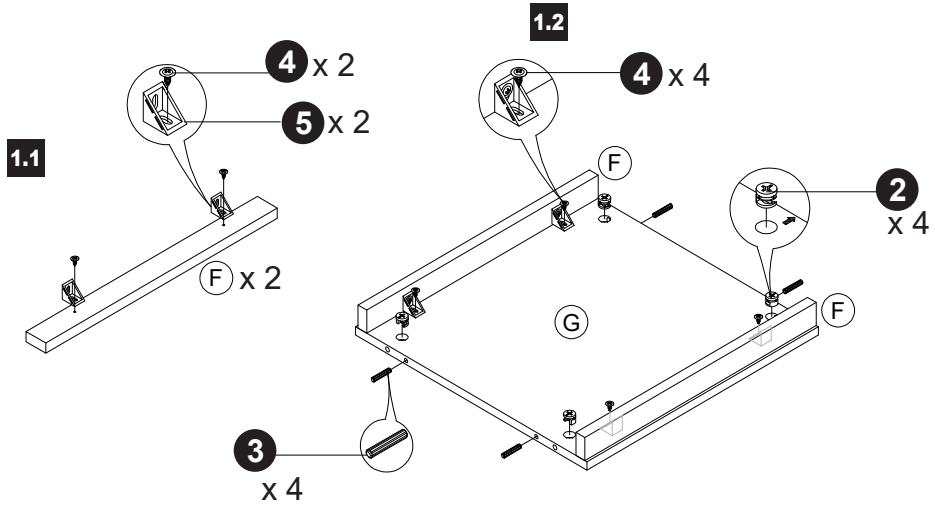
1.1
4 x 2
5 x 2
F x 2
1.2
4 x 4
F
2
x 4
G
F
3
x 4

2

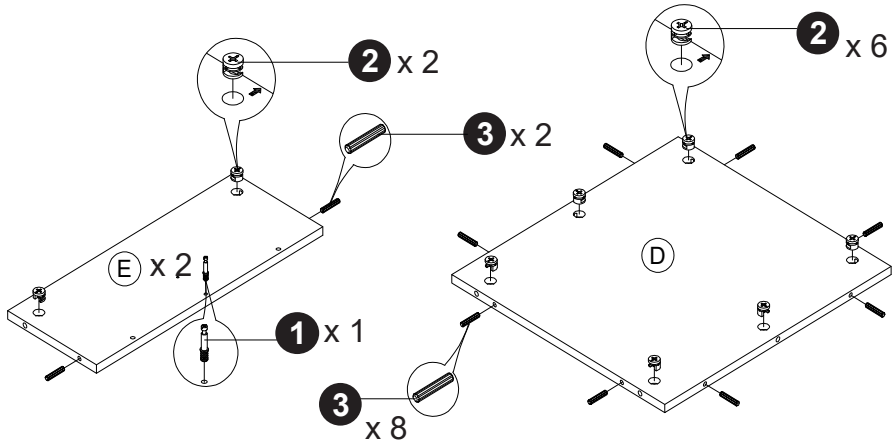
2 x 2
3 x 2
2 x 6
E x 2
D
1 x 1
3
x 8

3

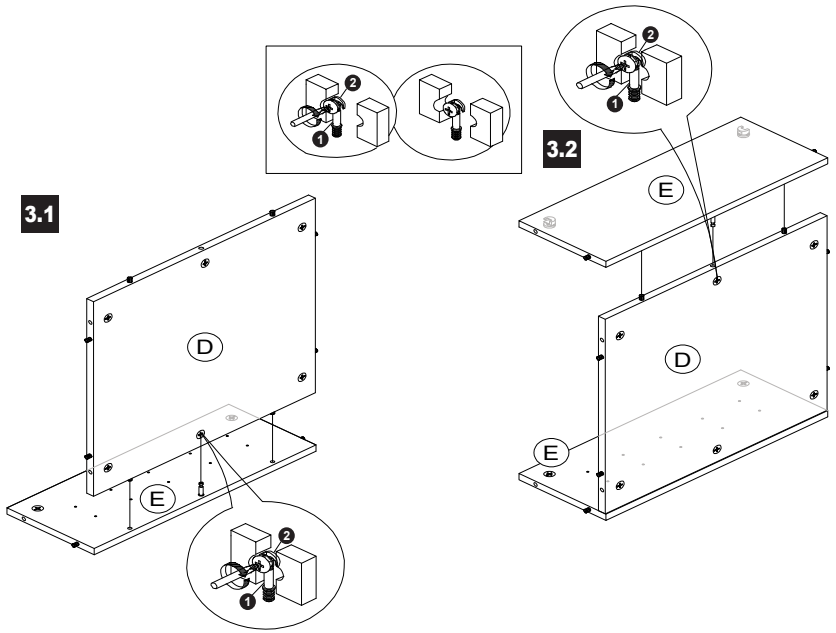
3.1
3.2
D
E
D
E
E

4

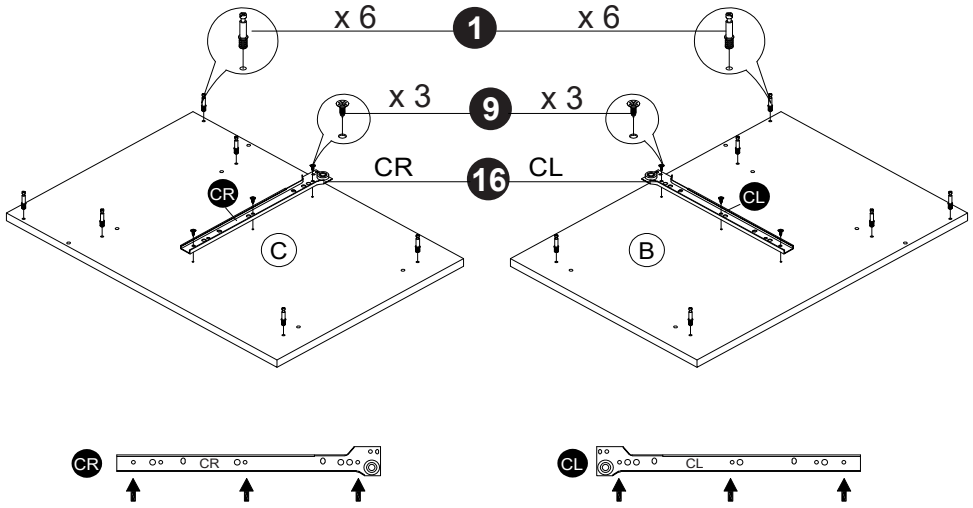
x 6
1
x 6
x 3
9
x 3
CR
16
CL
CR
CL
C
B
CR
CR
CL
CL

10

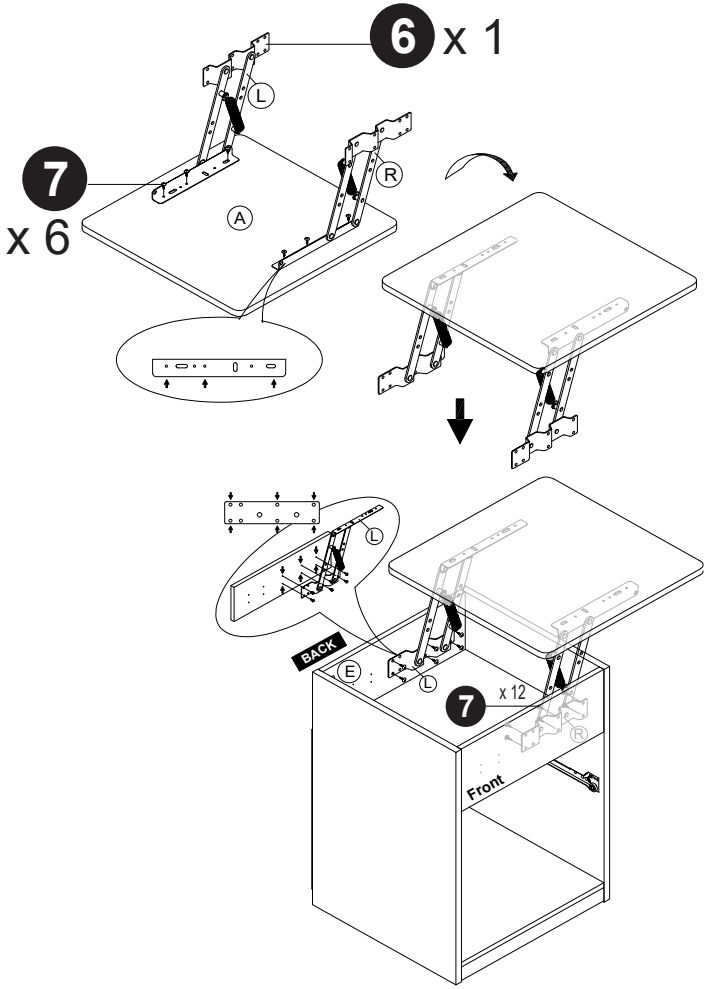
6 x 1
L
7
x 6
R
A
L
BACK
E
L
7
x 12
R
Front

11

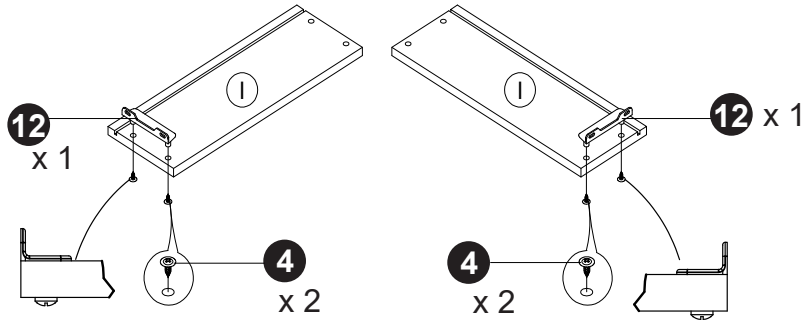
I
12
x 1
4
x 2
I
12 x 1
4
x 2

9

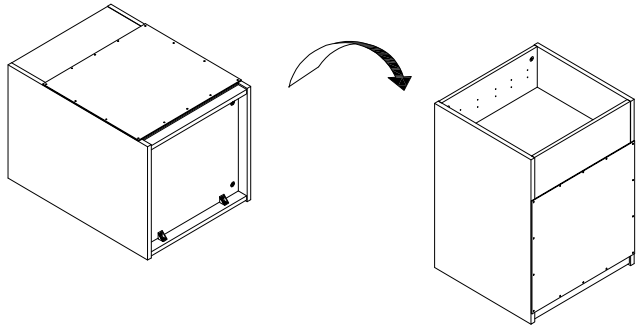

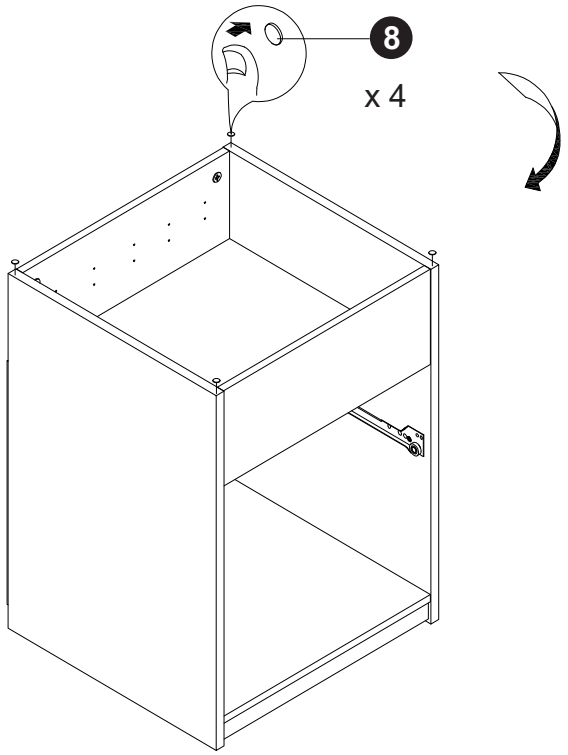

5

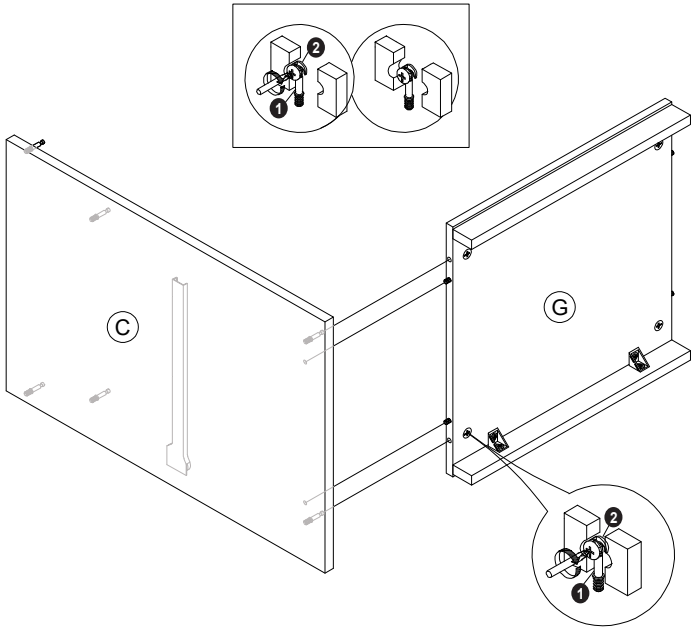

6

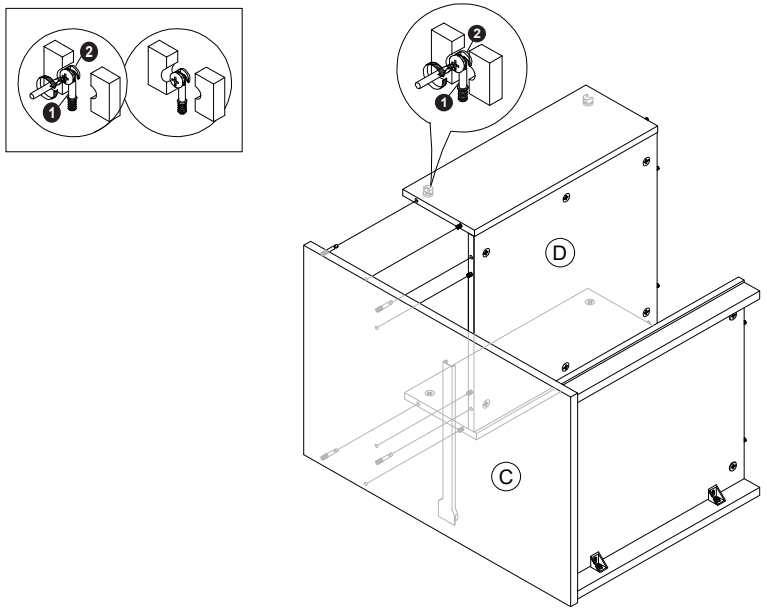

7

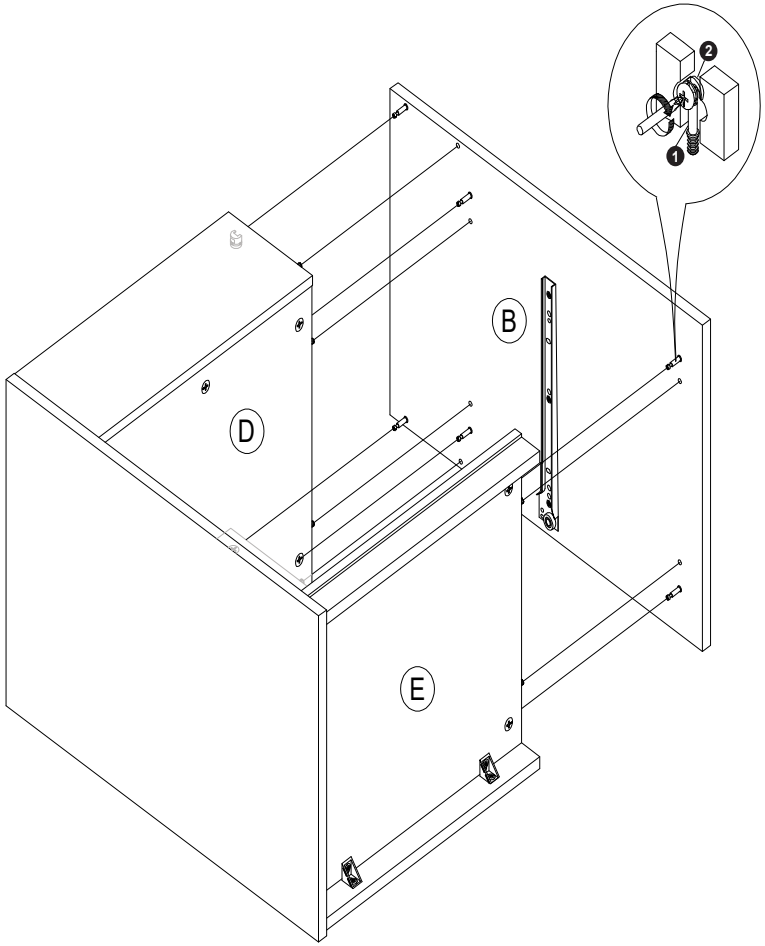

8

