Recommended Maximum Weight

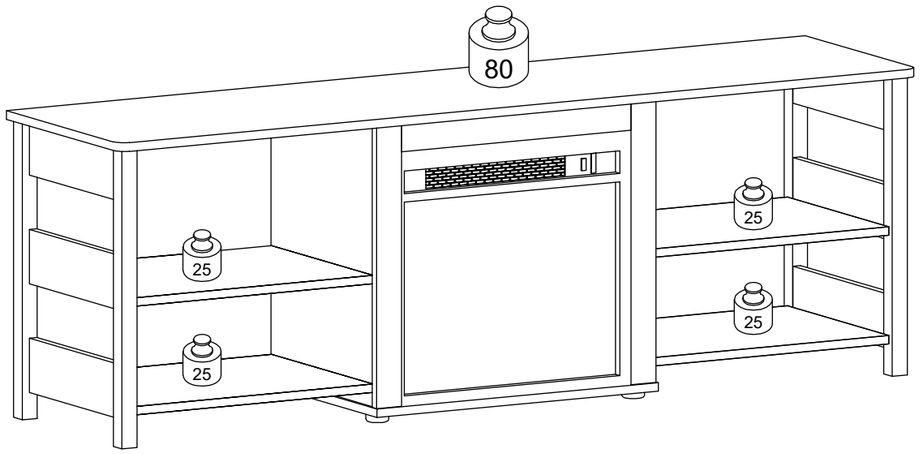

*Unit in Pound(lbs.)

WARNING:

>This unit has been designed to support the maximum loads shown. Exceeding these load limits could cause sagging, instability, product collapse, and/or serious injury.

>DO NOT allow children to climb on unit.

> Put heavier items on lower shelves.

Furinno®

Fits Space, Fits Budget

00:60

Approx. 60 minutes

Recomm. 2 Person

Tools Required

Assembly Instruction

Furinno 70 TV Stand with Fireplace

MODEL : **21346**

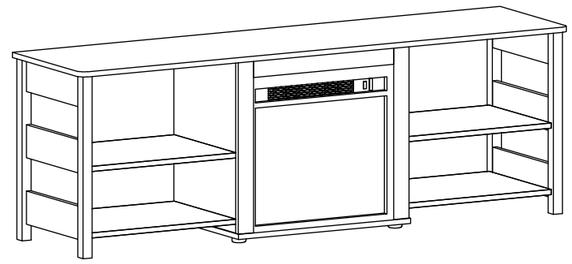

Customer Support

NEED HELP? For replacement requests or product inquiries, please contact our Customer Service Team by emailing us at **support@furinno.com**. Thank you for selecting Furinno!

www.furinno.com

2234620220315

HARDWARE & PARTS LIST

NO	HARDWARE LIST	QTY
1	MINIFIX 1a 1b	24pcs
2	WOOD DOWEL	52pcs
3	POZIHEAD SCREW	20pcs
4	L BRACKET	2pcs
5	PWA C/B SCREW	11pcs
6	METAL L BRACKET	1pc
7	PVC PLUG LEG	4pcs
8	FIREPLACE 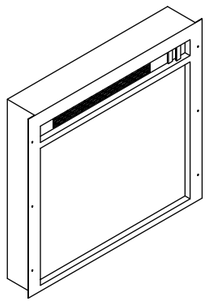	1pc

NO	PART LIST	QTY
A	TOP PANEL	1pc
B	BOTTOM PANEL	1pc
C	LEFT SIDE PANEL	1pc
D	RIGHT SIDE PANEL	1pc
E	UPPER LEG SUPPORT PANEL	2pcs
F	LEG SUPPORT PANEL	4pcs
G	FIX SHELF PANEL	4pcs
H	SUPPORT PANEL	1pc
I	RAIL PANEL	2pcs
J	LEG PANEL (1)	2pcs
K	LEG PANEL (2)	2pcs

USEFUL HINTS BEFORE YOU START:

1. Read each step carefully before starting.

2. It is important that each step is performed in correct order to avoid difficulties.

3. Identify, sort and count the parts before assembly.

4. Assemble your furniture on packaging cardboard to prevent scratch or damage.

5. Clean the product with mild cleanser using soft damped cloth. Do not use harsh or abrasive cleanser.

6. Using uncompatible hardware might cause damage to product.

STEP 14

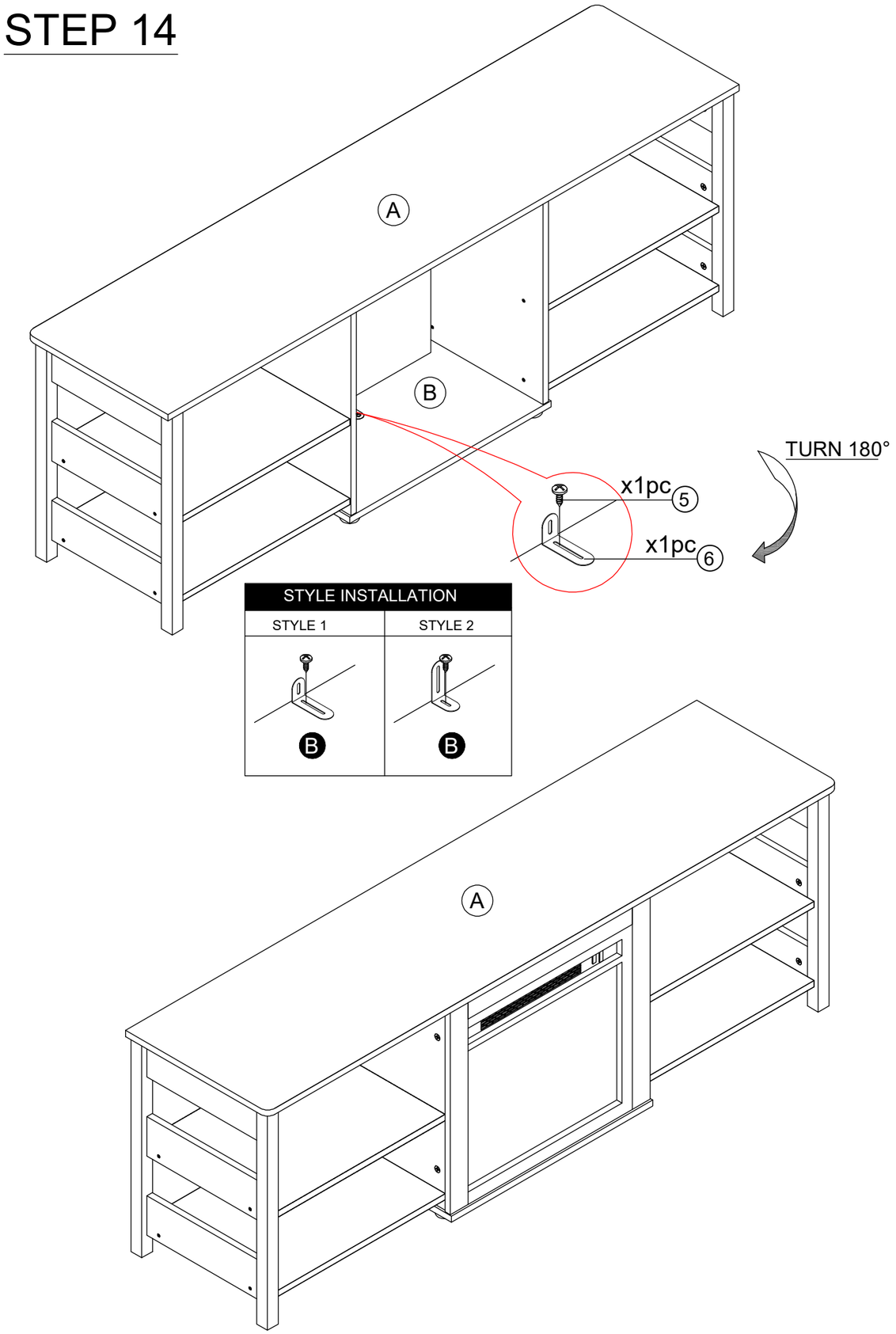

STEP 13

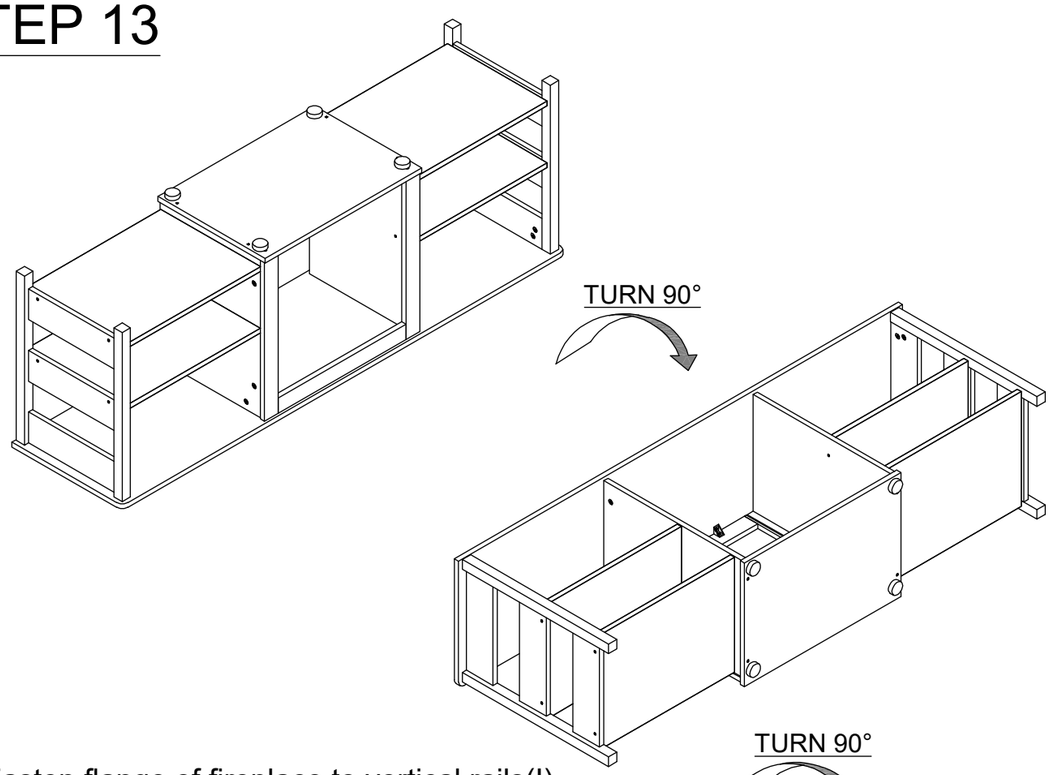

Fasten flange of fireplace to vertical rails(I) with screw (5).You will screw into the **groove of the vertical rails(I).**

FRONT VIEW

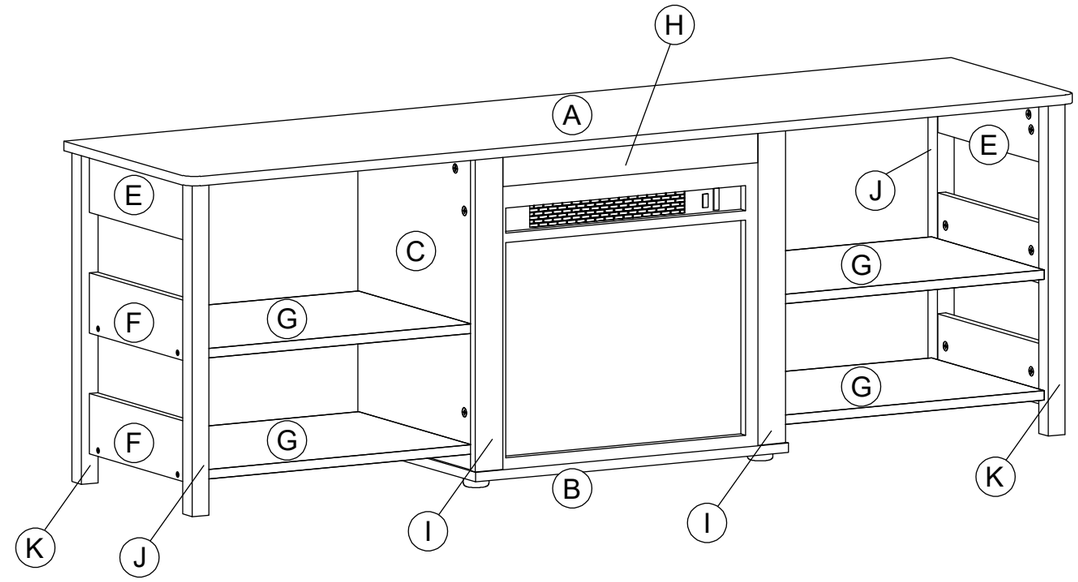

BACK VIEW

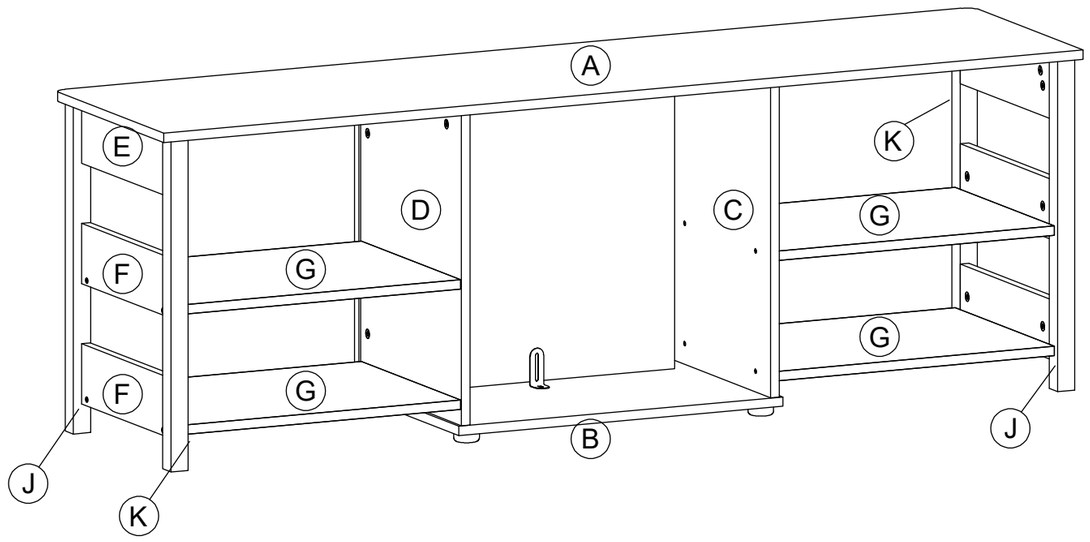

ASSEMBLY INSTRUCTIONS

BEFORE YOU BEGIN, PLEASE READ ASSEMBLY INSTRUCTIONS CAREFULLY, FOLLOW THEM STEP BY STEP.

STEP 1

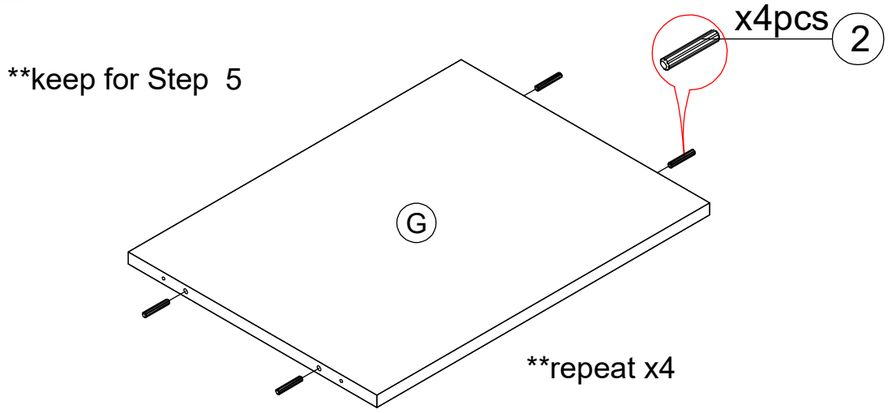

STEP 2

Step 2.1

**repeat x2

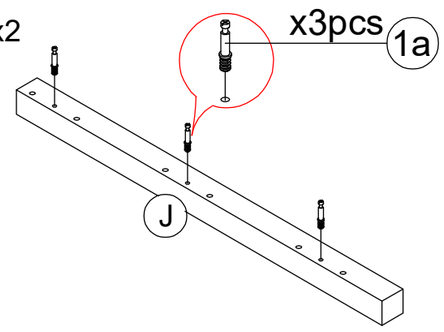

Step 2.2

**repeat x2

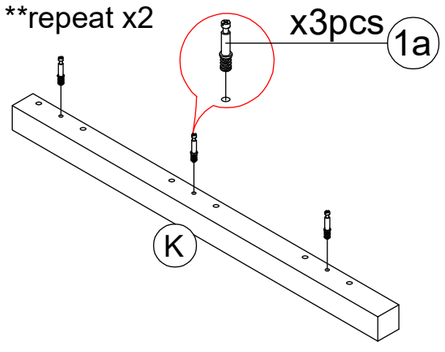

Step 2.3

**repeat x2

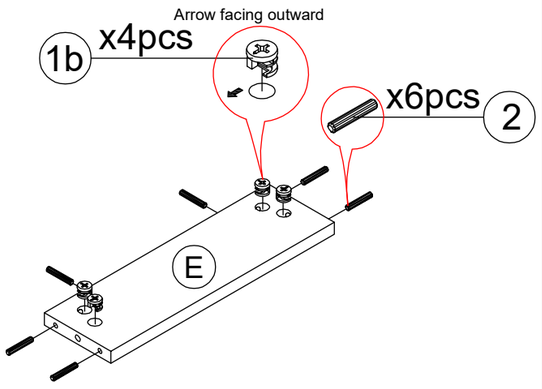

Step 2.4

**repeat x4

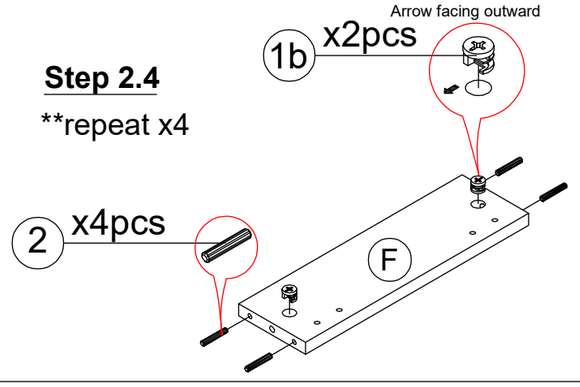

STEP 11

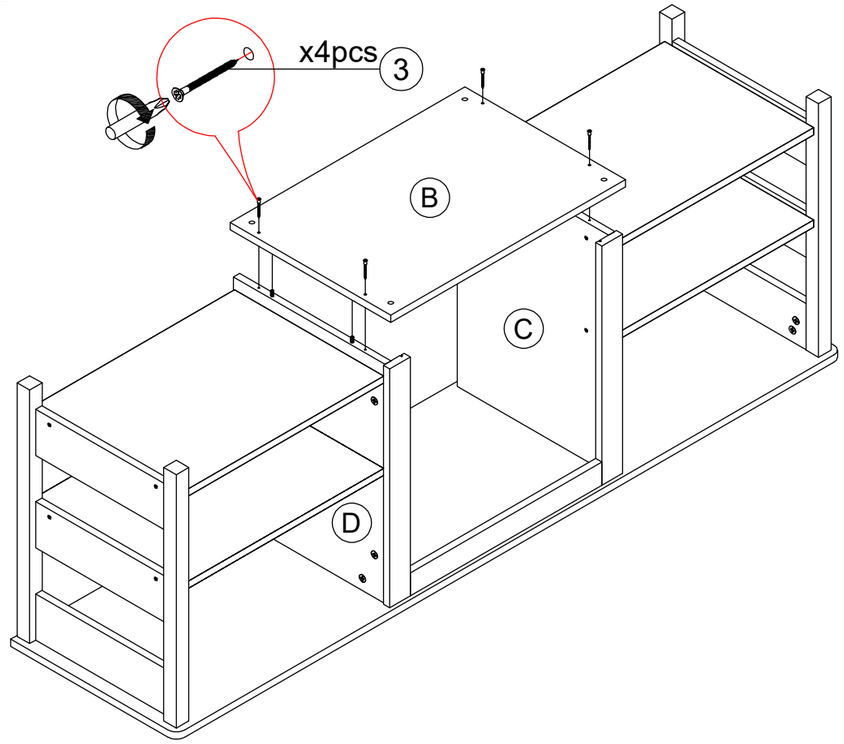

STEP 12

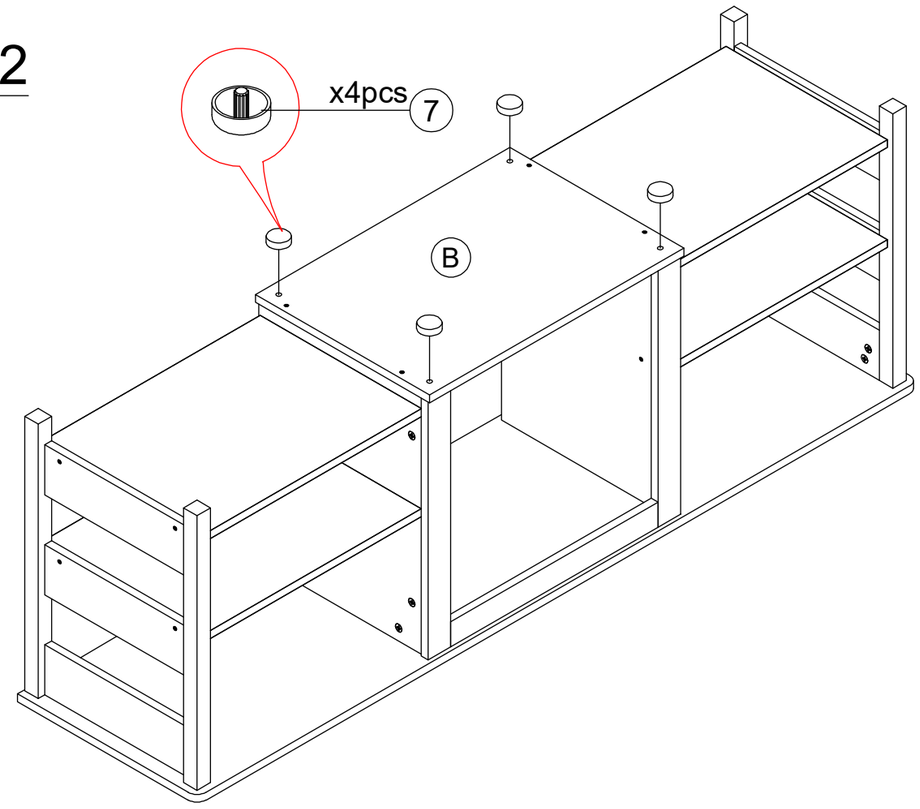

STEP 9

Step 9.1

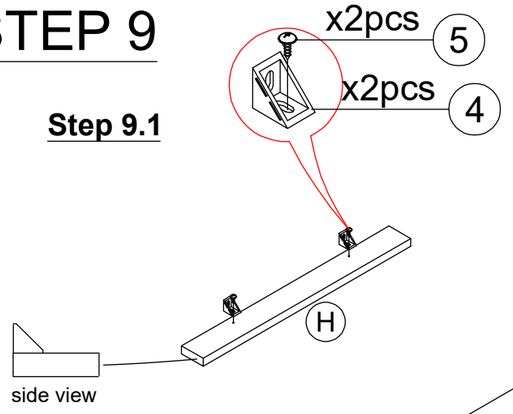

Step 9.2

STEP 10

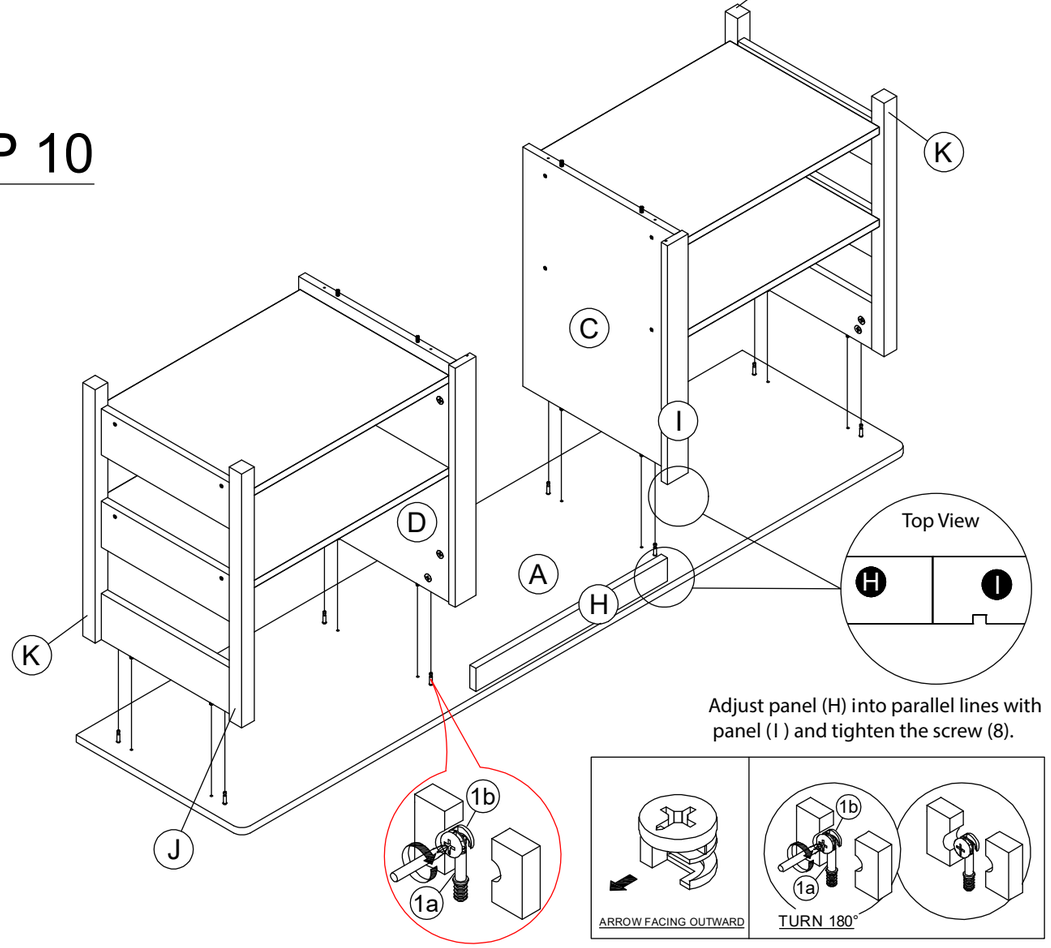

STEP 3

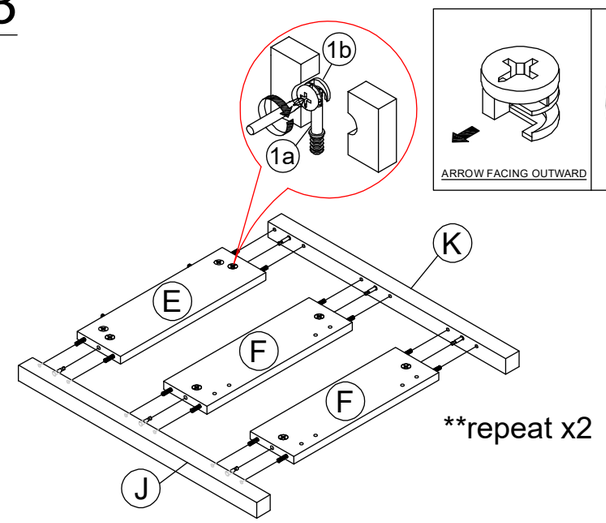

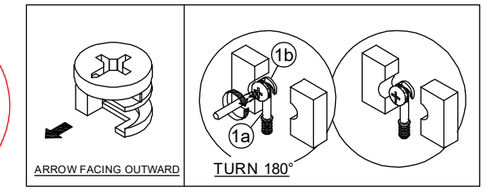

STEP 4

Step 4.1

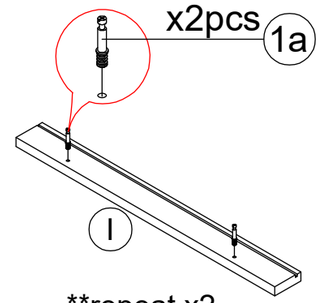

Step 4.2

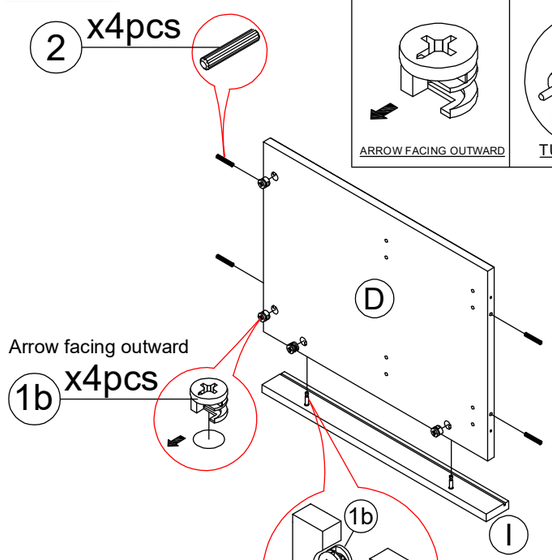

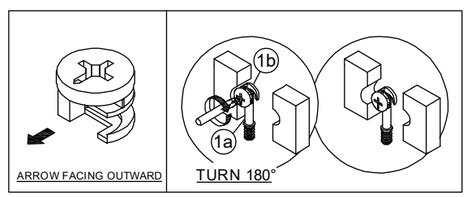

Step 4.4

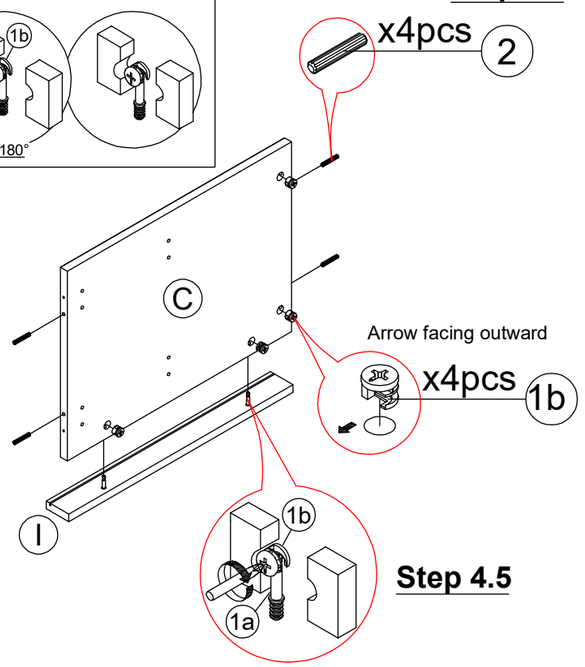

STEP 5

Step 5.2

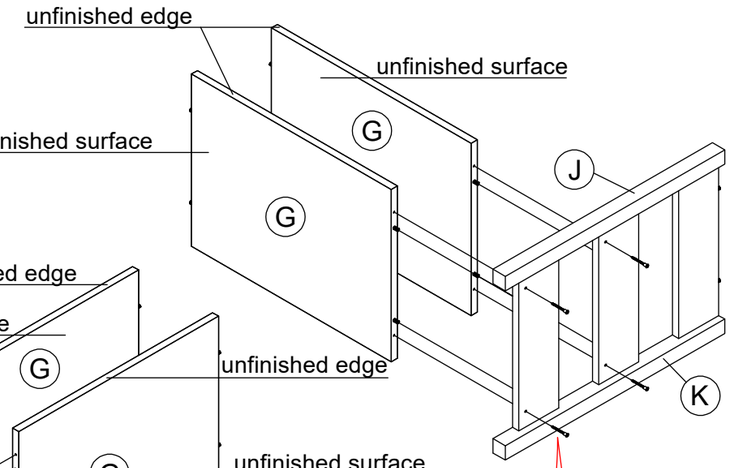

Step 5.1

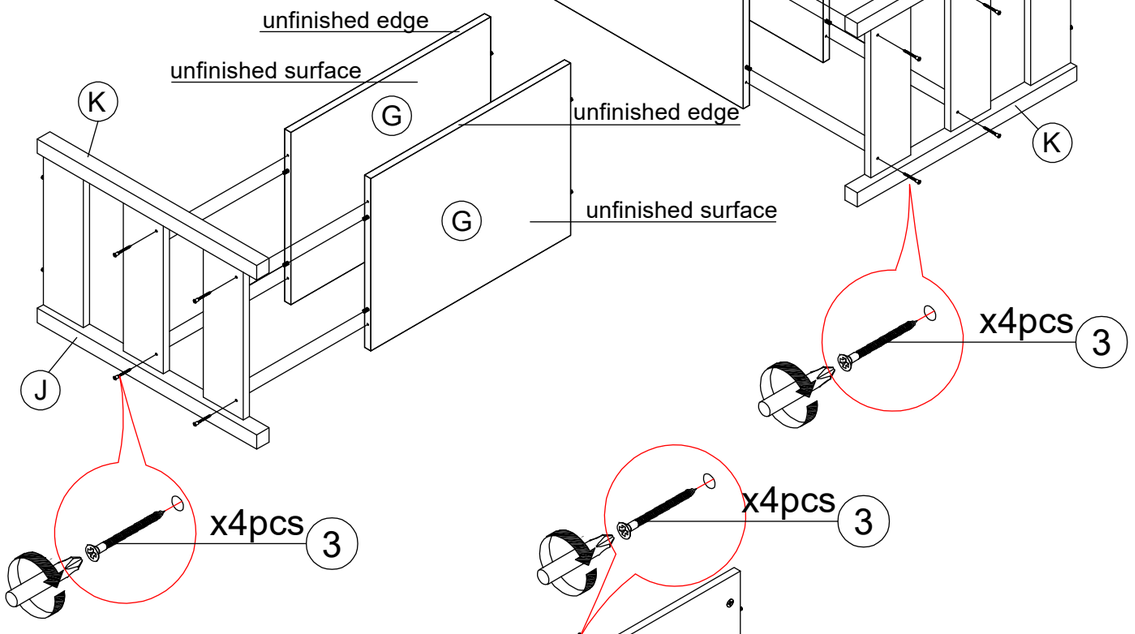

STEP 6

Step 6.2

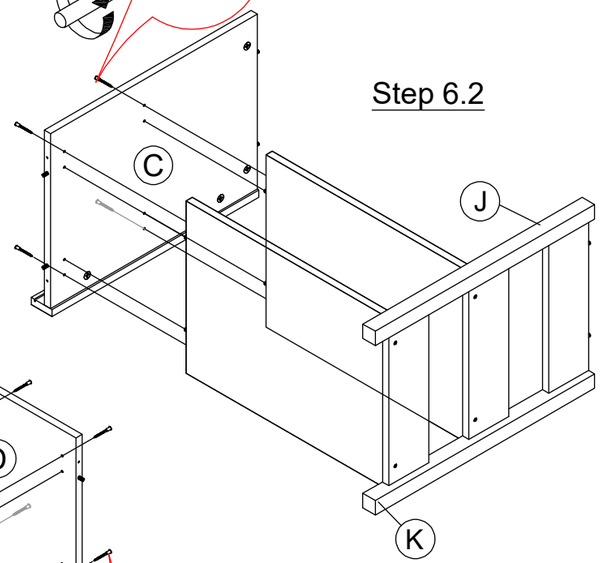

Step 6.1

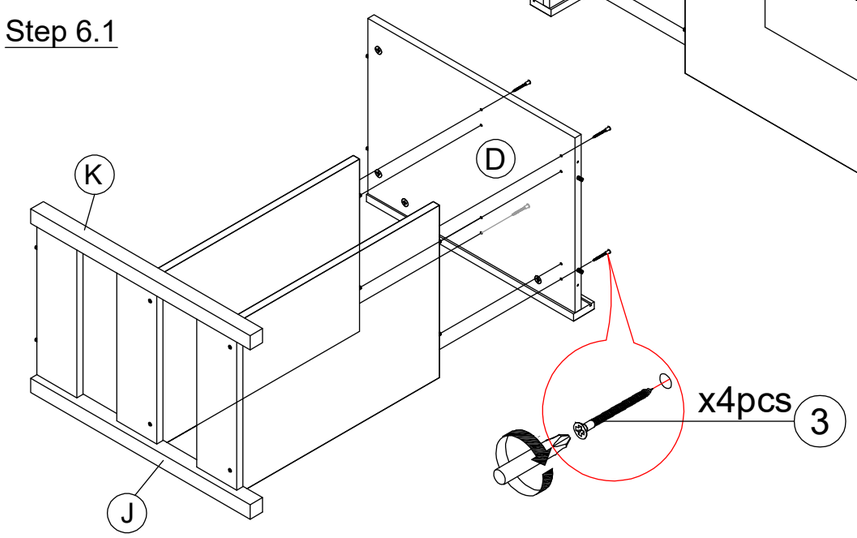

STEP 7

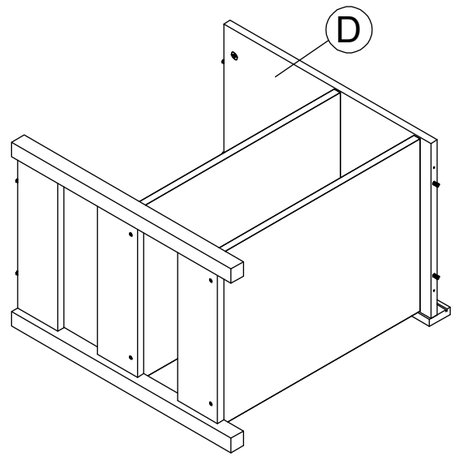

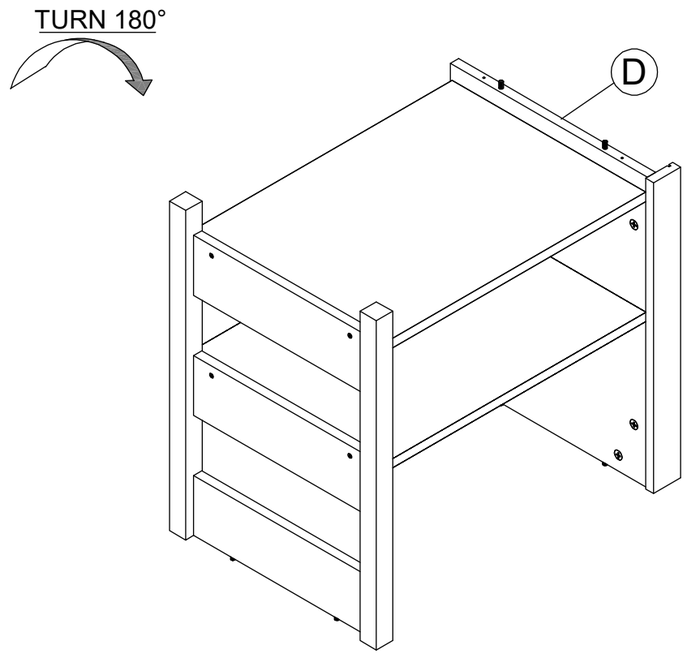

STEP 8

