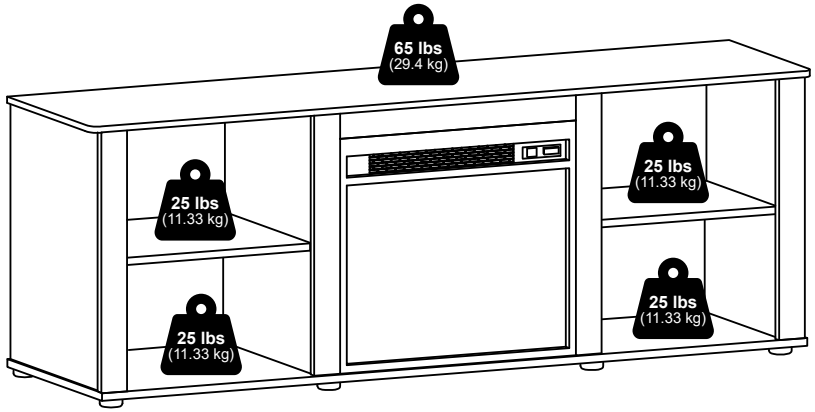

Furinno®

Fits Space, Fits Budget



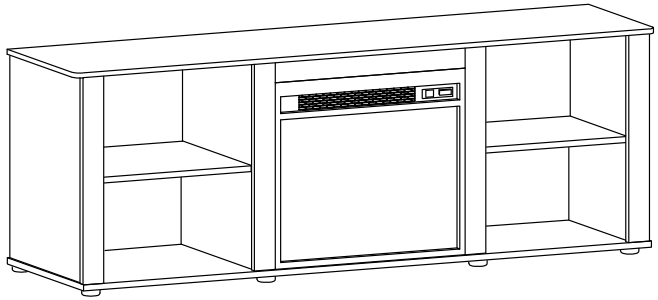

MODEL: 21347

support@furinno.com

www.furinno.com

2134720230531

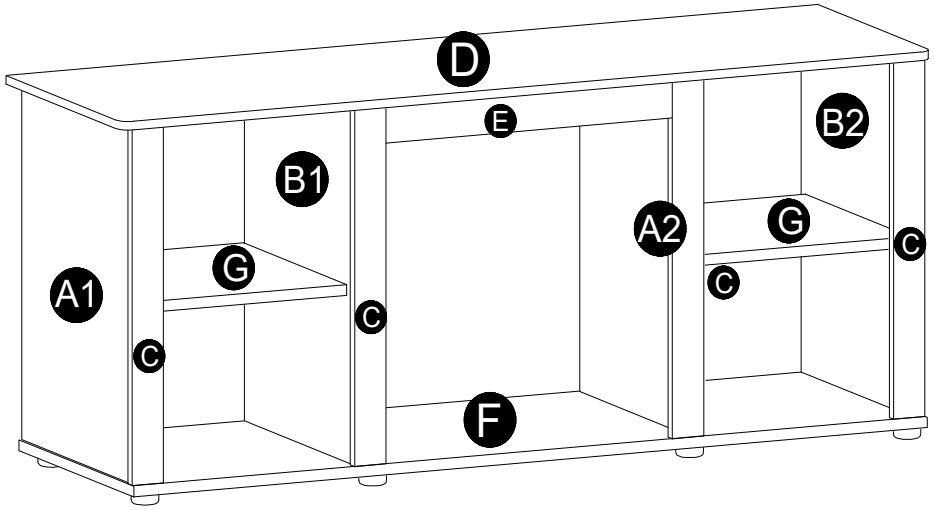

1 x 16 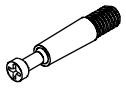 M6 x 31mm	2 x 16  15mm	3 x 16  M6 x 30mm	4 x 8  M5 x 40mm
5 x 8  5 x 6 x 16mm	6 x 2 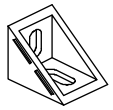 17 x 22mm	7 x 8 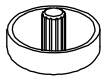 Ø40 x 14mm	8 x 1 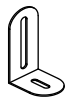 1.2 x 24 x 90mm
9 x 11  M4 x 11mm	10 x 36  2.5 x 18mm	11 x 1 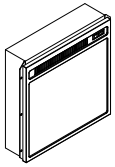	12 x 1 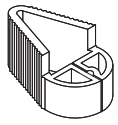

15

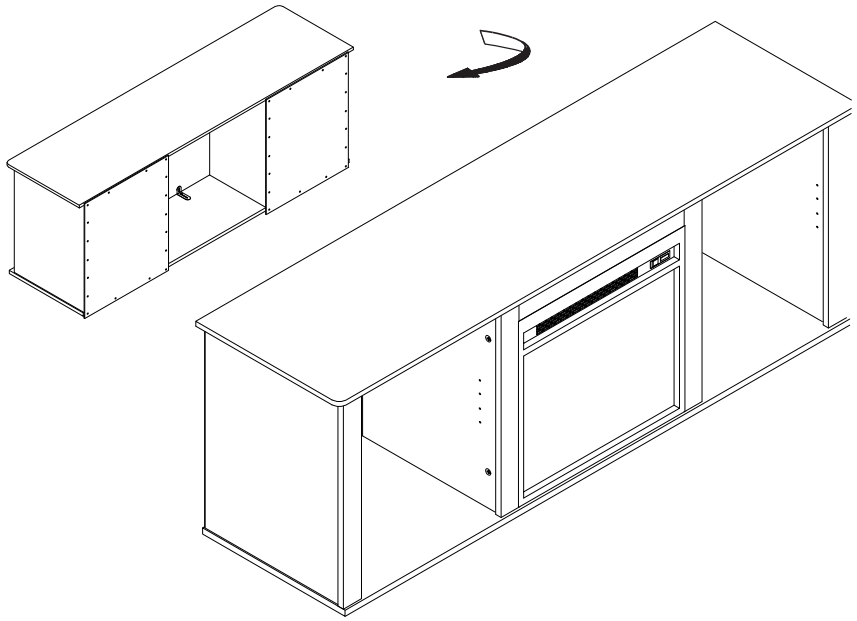

16

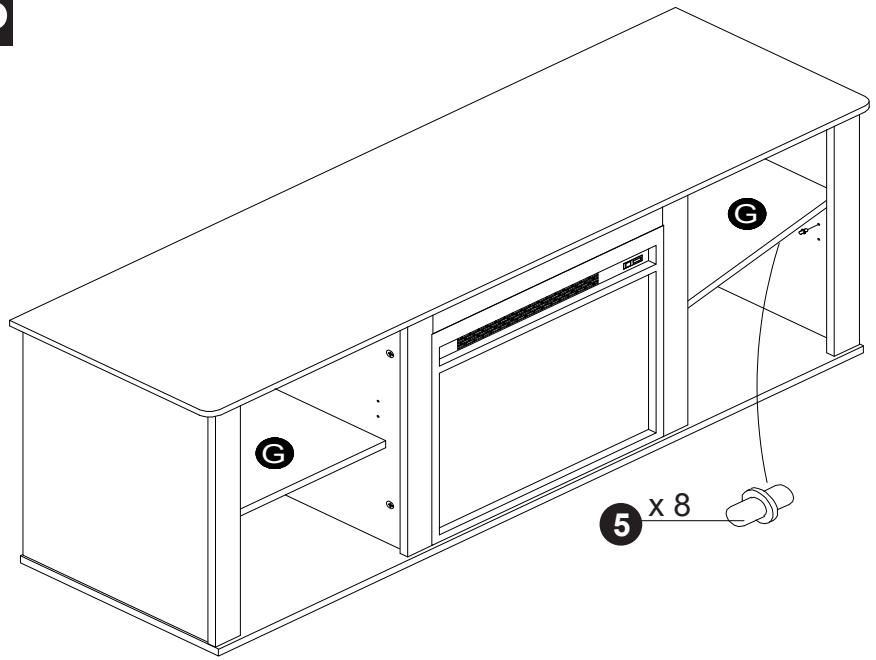

13

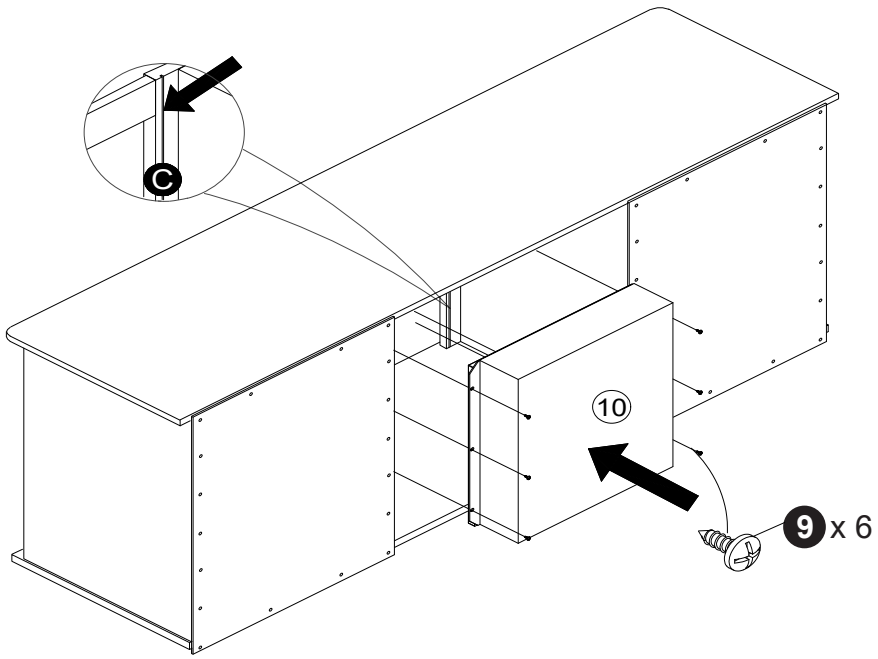

14

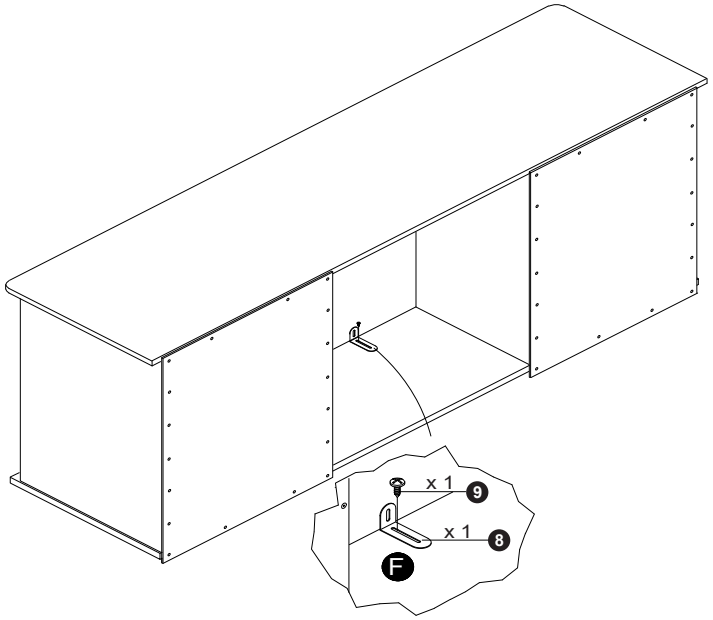

1

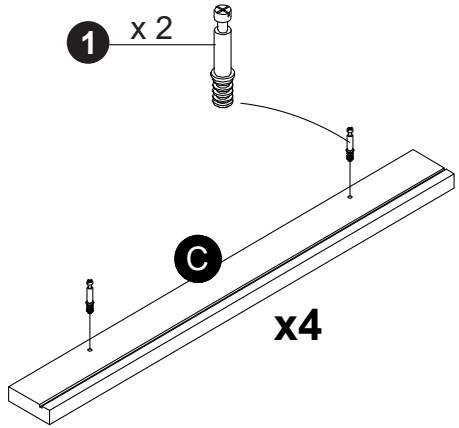

2

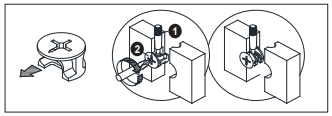

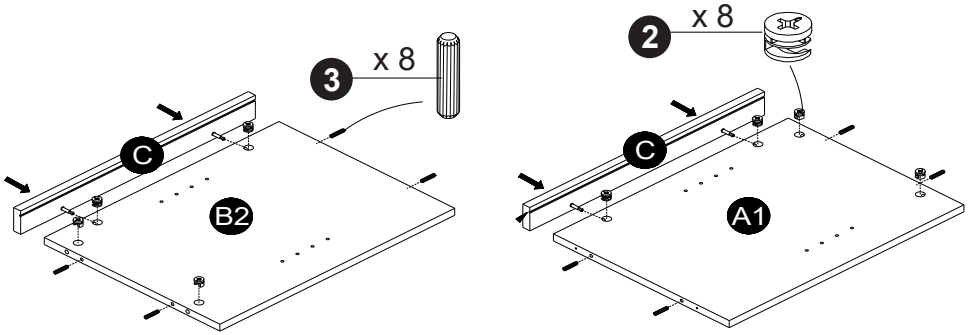

3

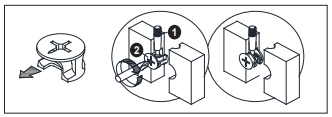

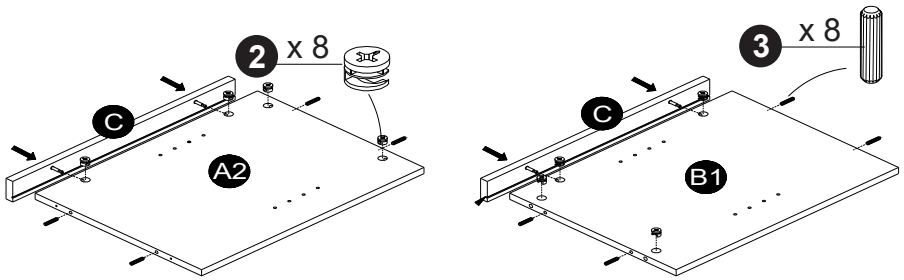

4

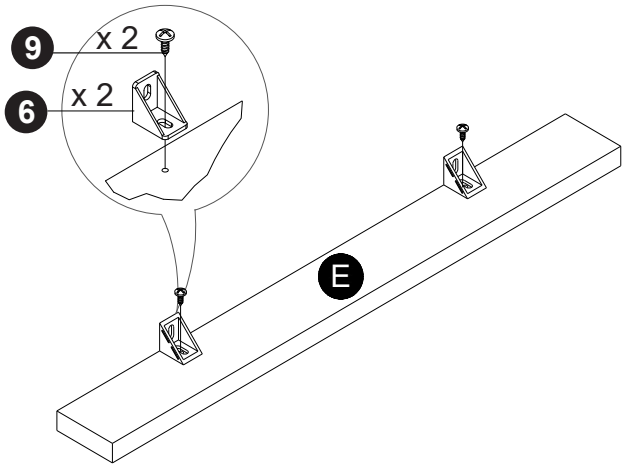

11

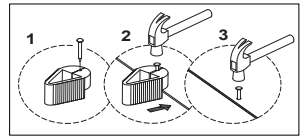

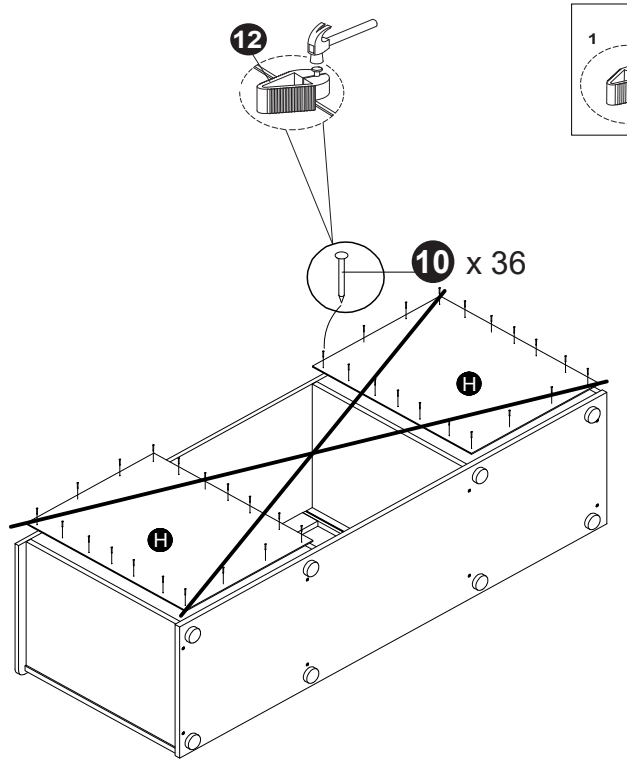

12

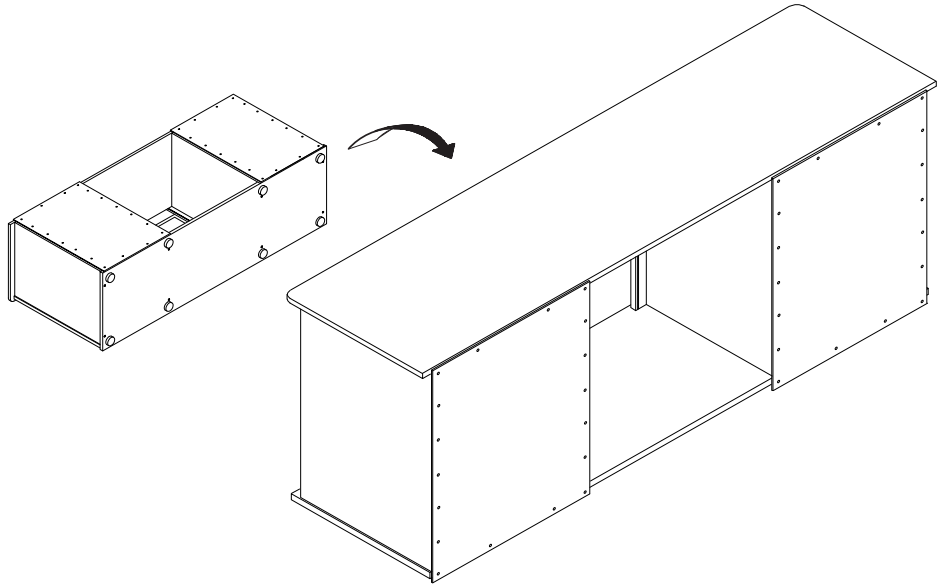

9

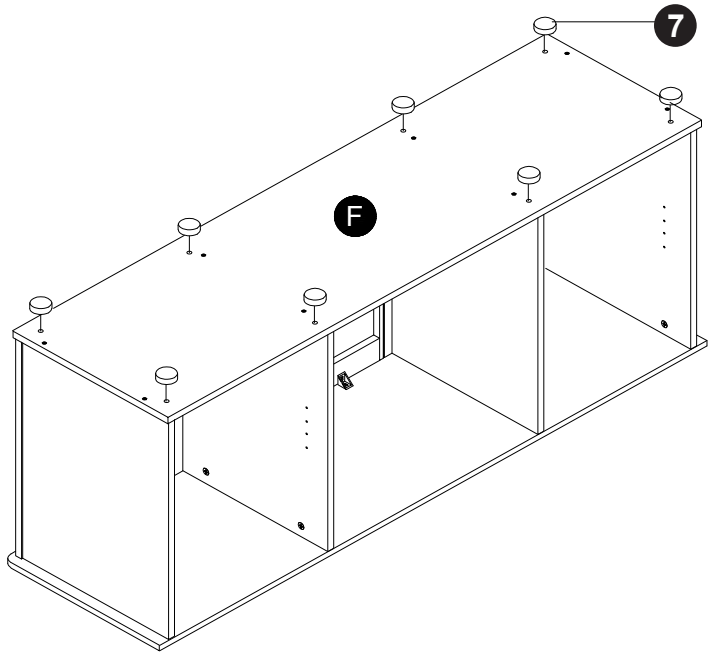

10

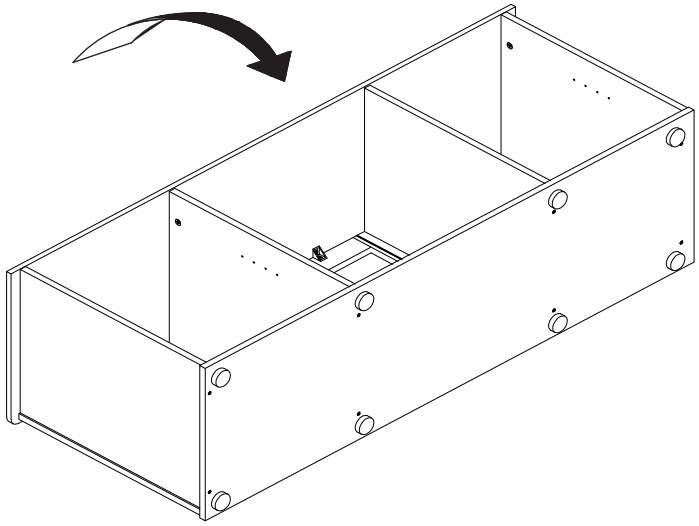

5

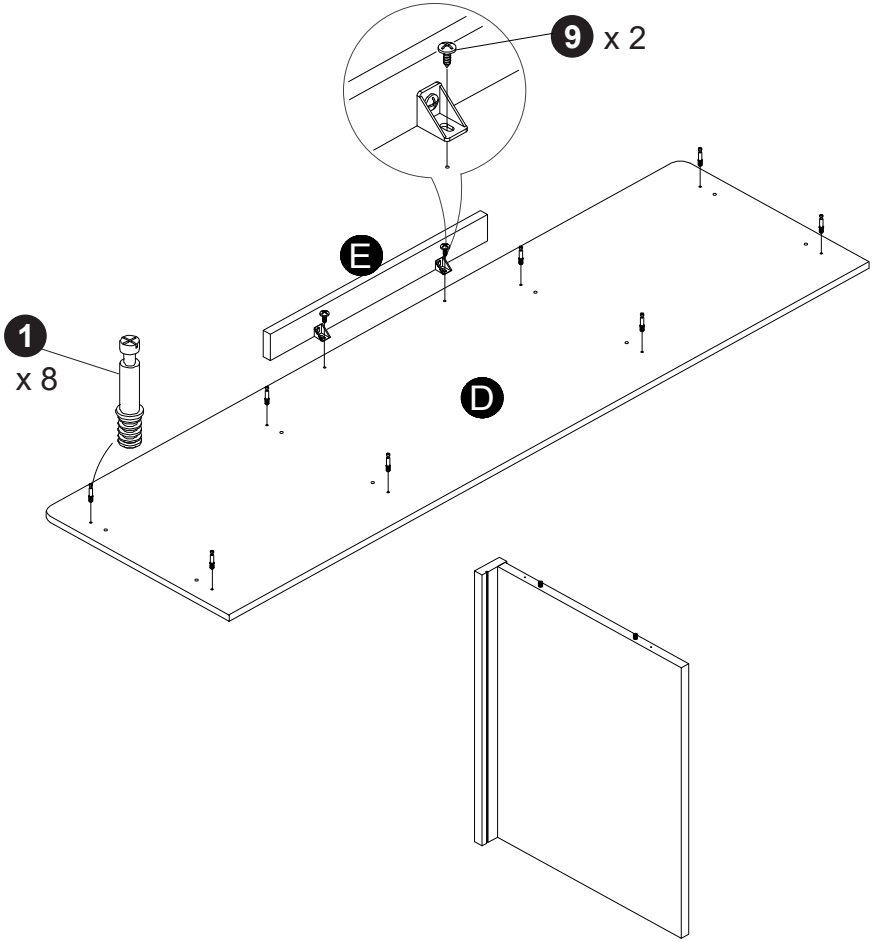

6

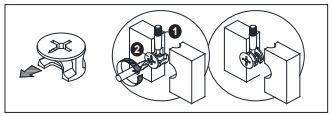

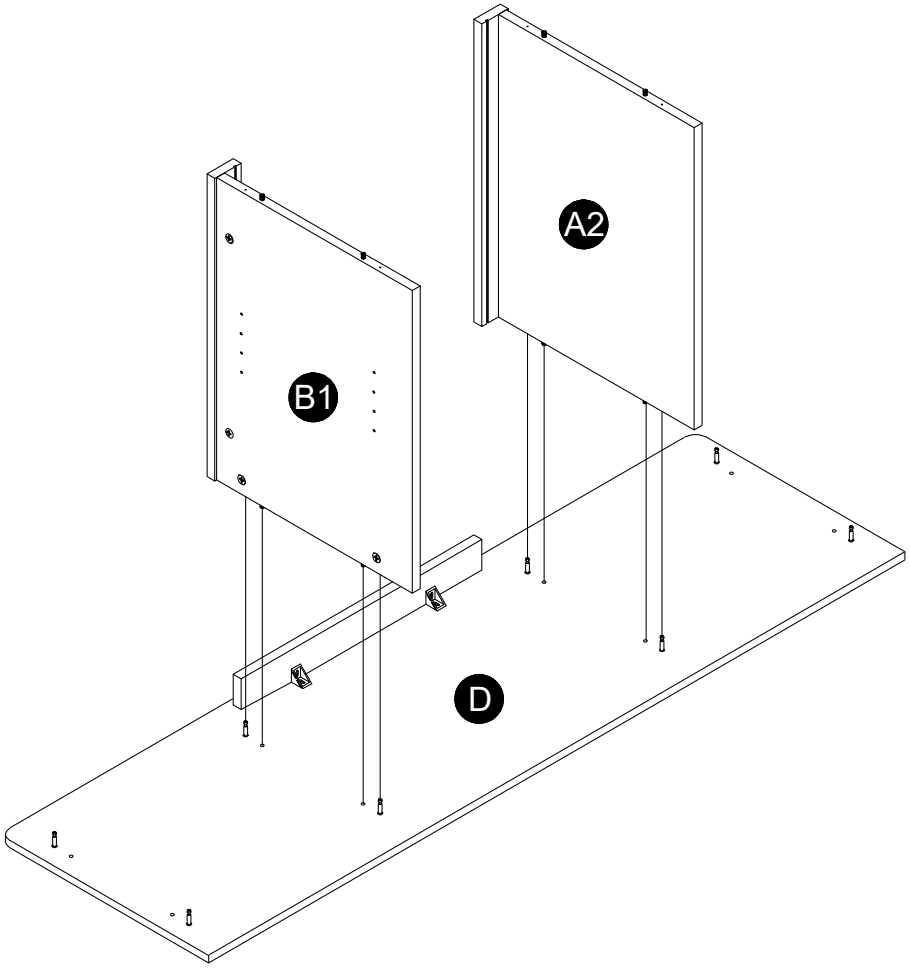

7

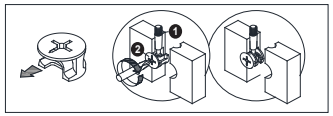

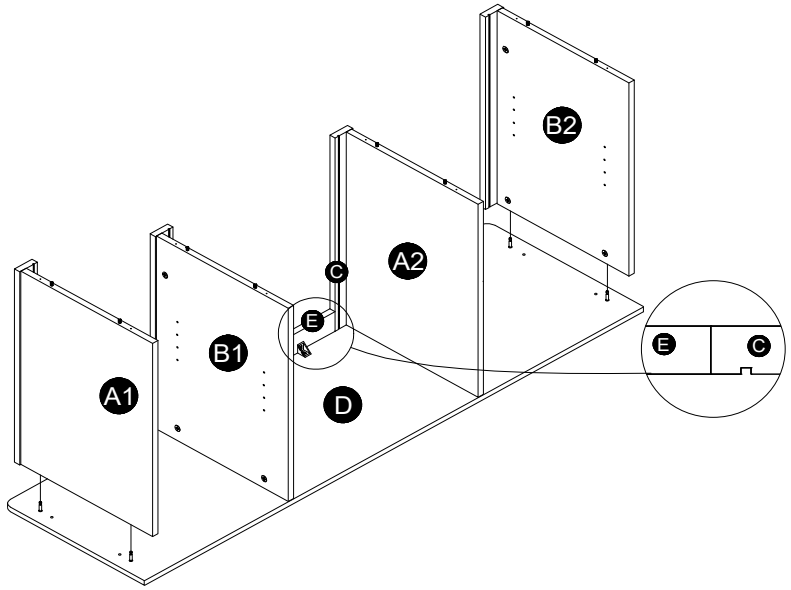

8

