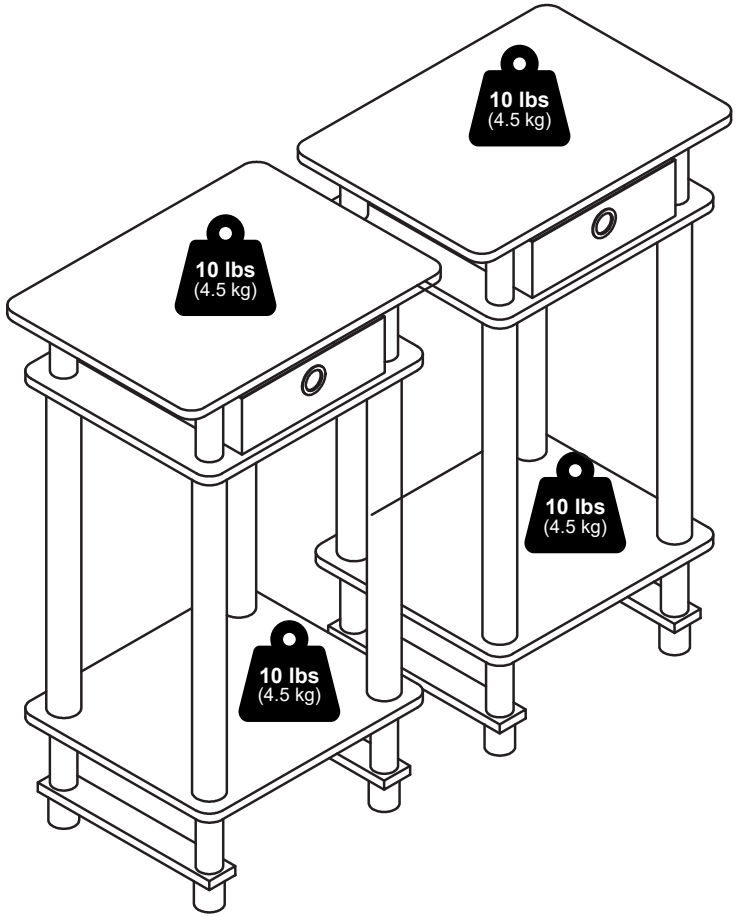

Furinno®

Fits Space, Fits Budget



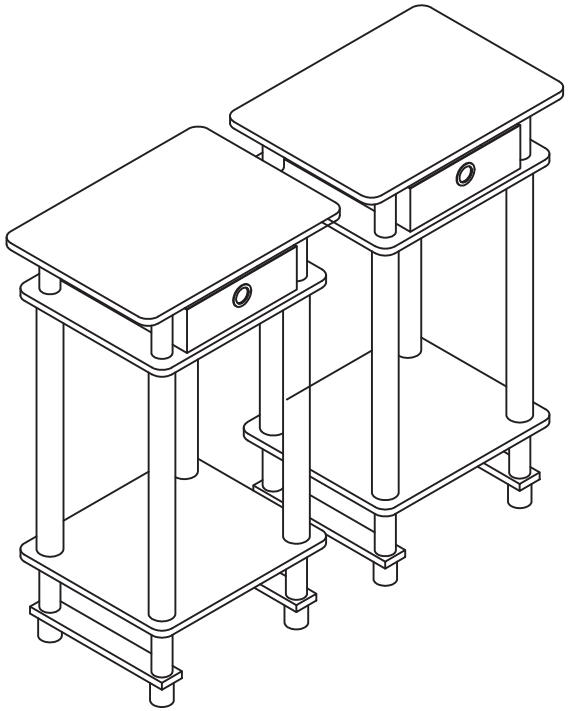

MODEL: 2-17017

support@furinno.com

www.furinno.com

21701720230609

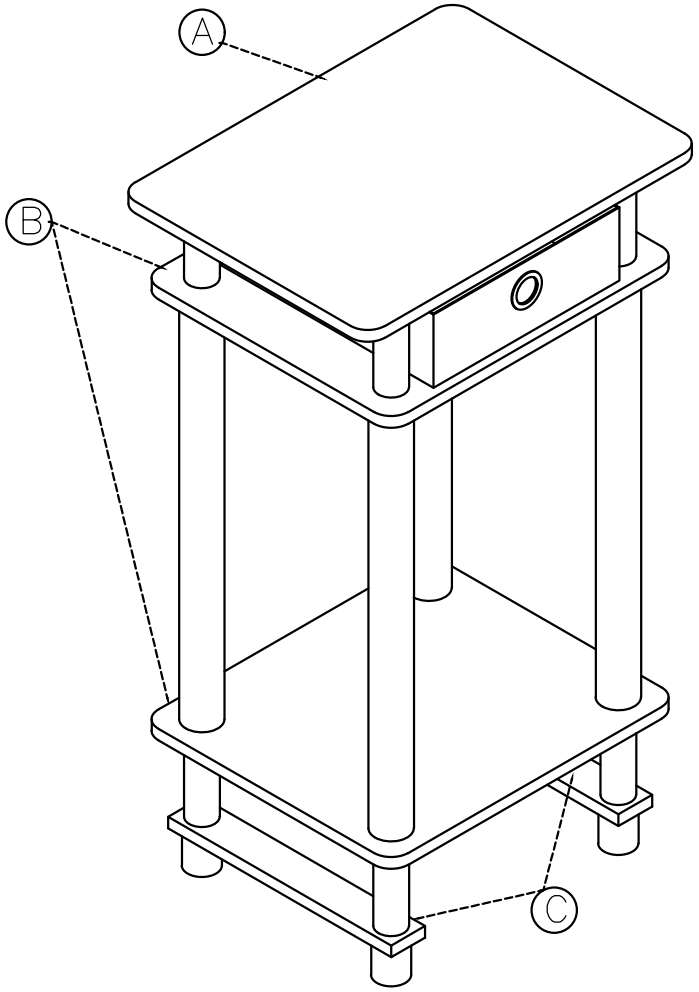

1 x 16	2 x 8	3 x 8	4 x 2
34 x 88mm	38 x 440mm	34 x 38mm	220 x 250 x 75mm

7

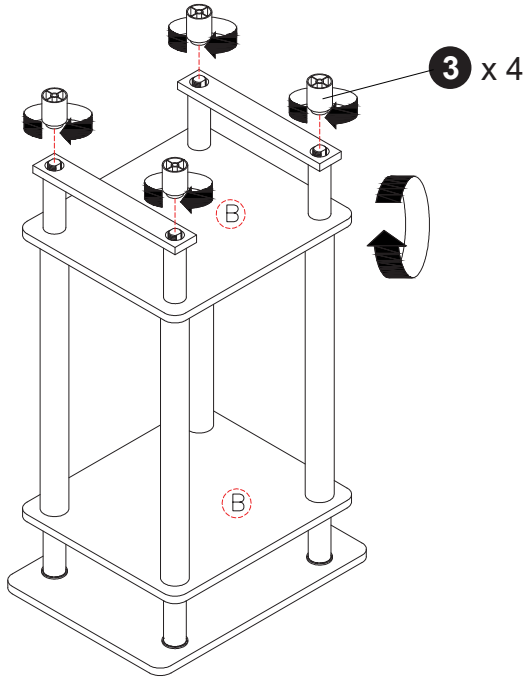

8

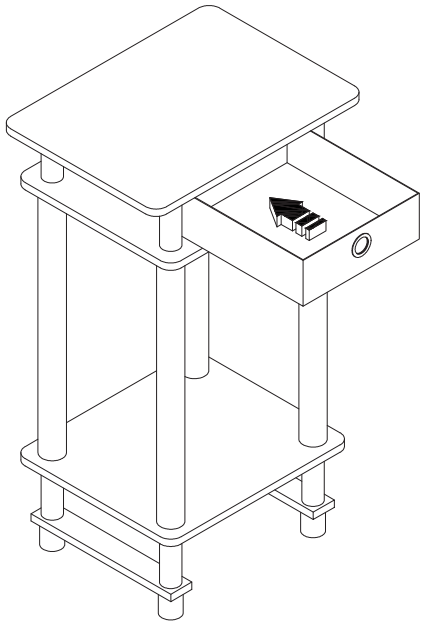

5

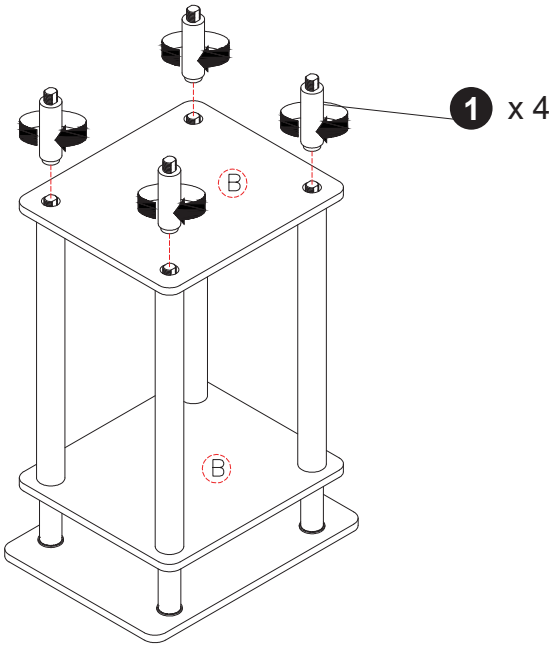

6

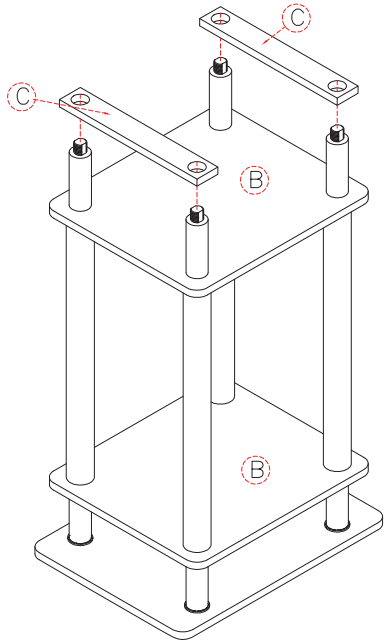

1

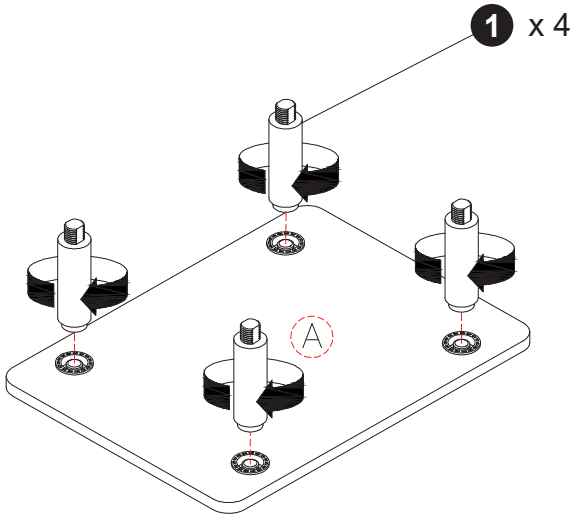

2

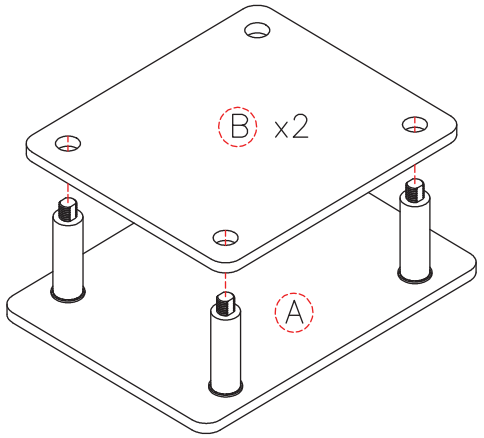

3

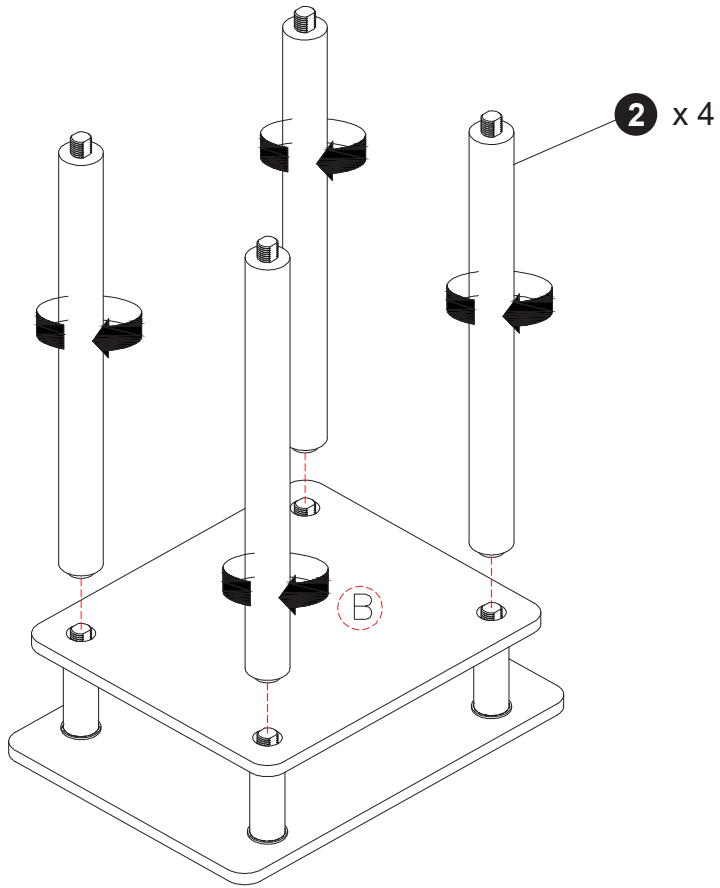

4

