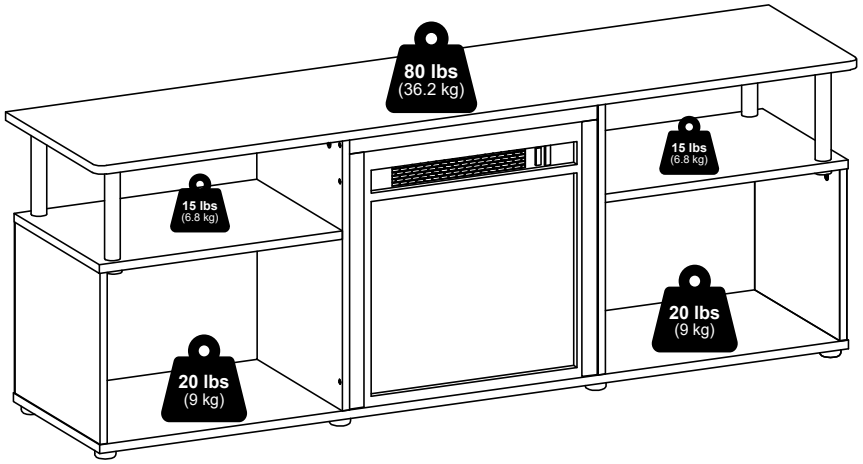

Furinno®

Fits Space, Fits Budget



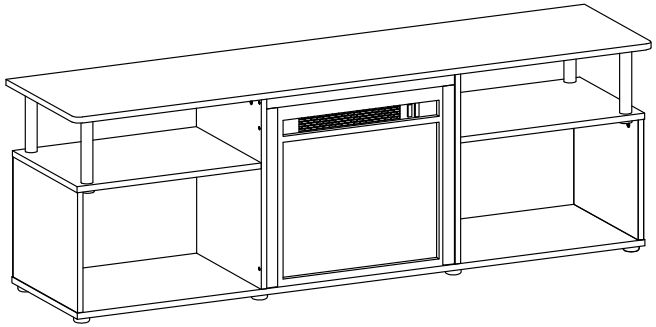

MODEL: 22019

support@furinno.com

www.furinno.com

2201920230601

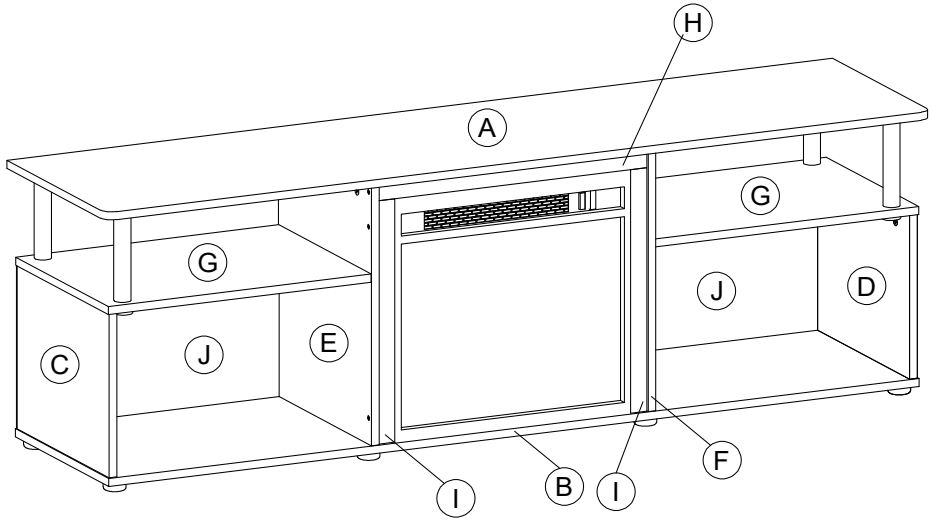

1 x 8 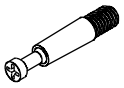 M6 x 31mm	**2** x 8  15mm	**3** x 22  M6 x 20mm	**4** x 12  M5 x 40mm
5 x 6  M4 x 32mm	**6** x 28 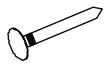 2.5 x 18mm	**7** x 7  M4 x 11mm	**8** x 1  1.2 x 24 x 90mm
9 x 4 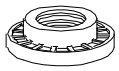 Ø34 x 8mm	**10** x 4 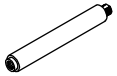 Ø30 x 162mm	**11** x 8 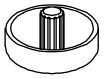 Ø40 x 14mm	**12** x 1 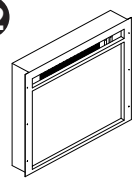
13 x 4  Ø34 x 2mm	**14** x 1 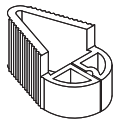		

15

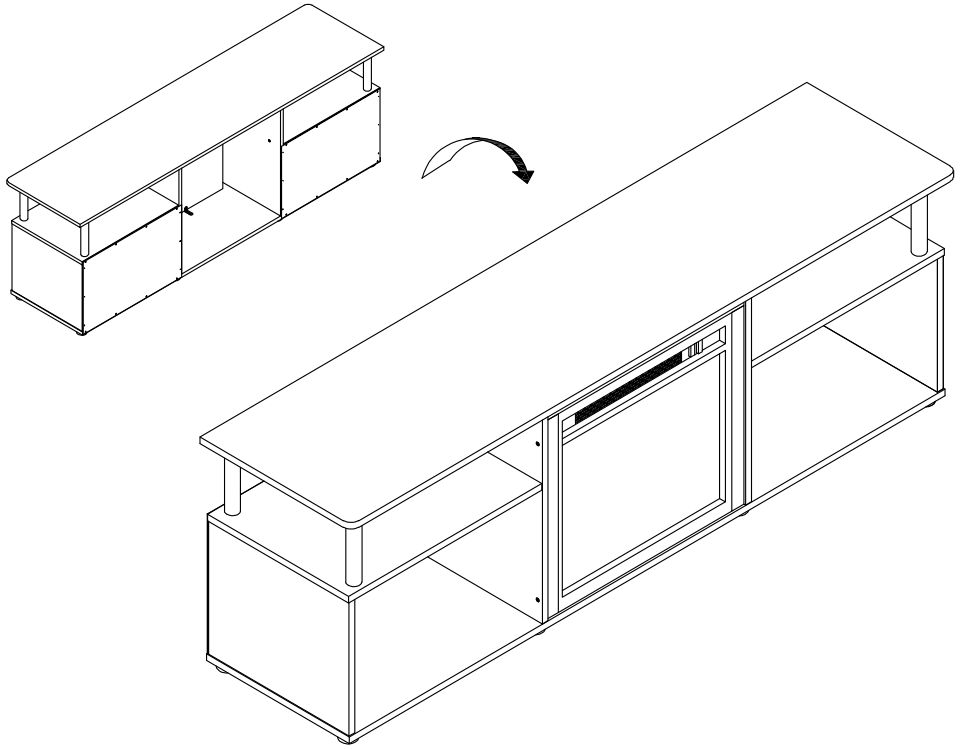

13

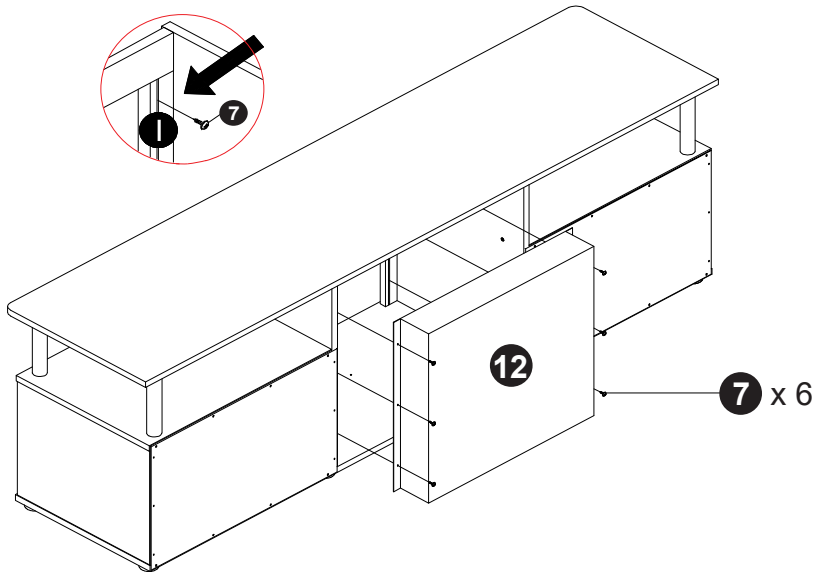

14

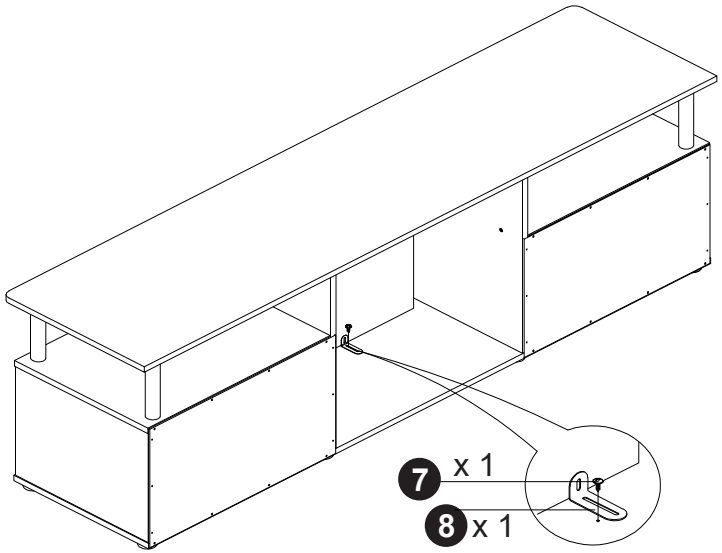

1

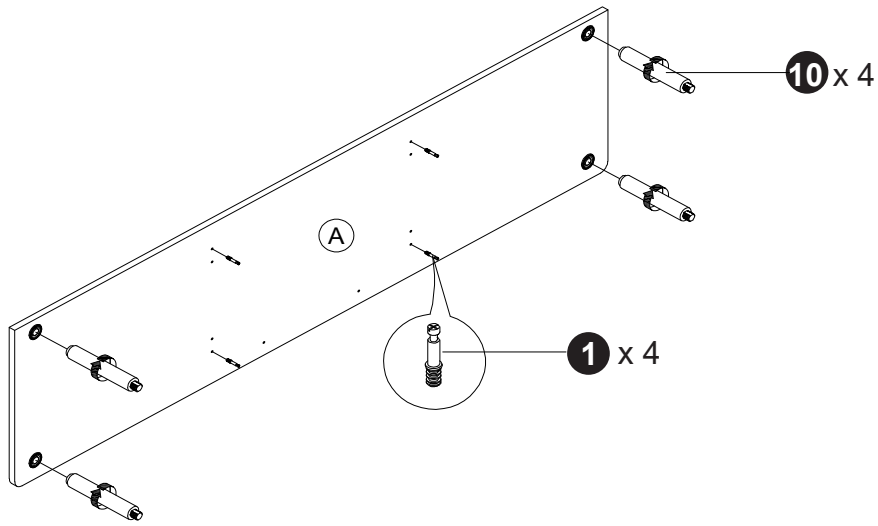

2

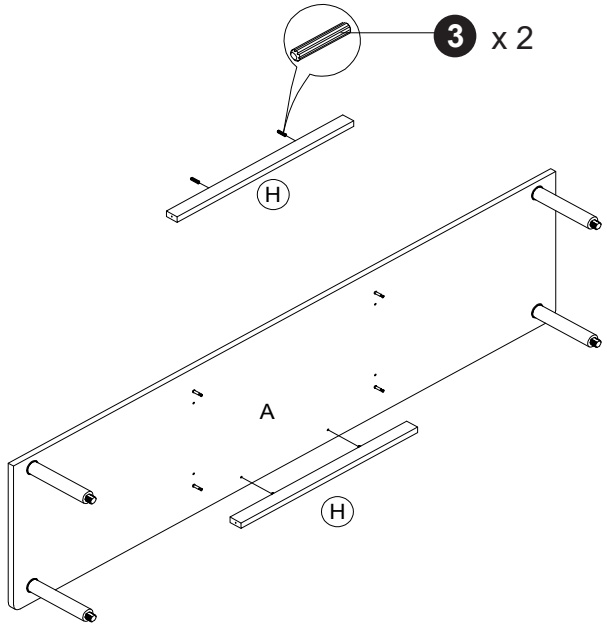

3

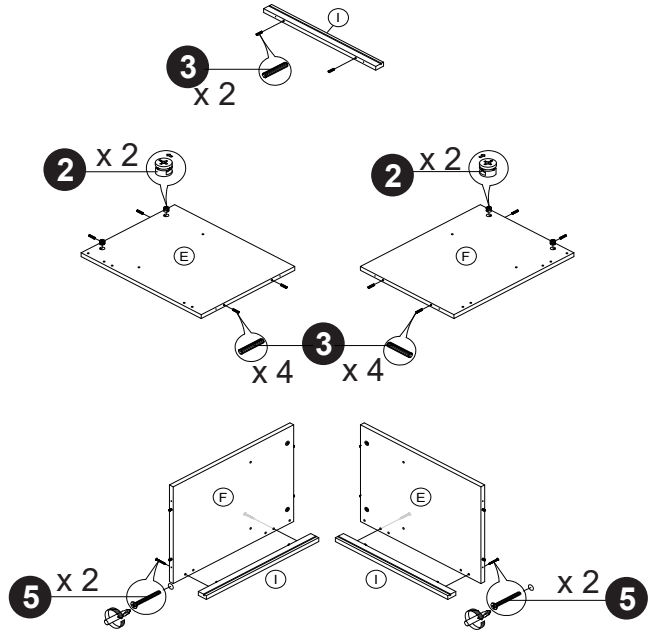

4

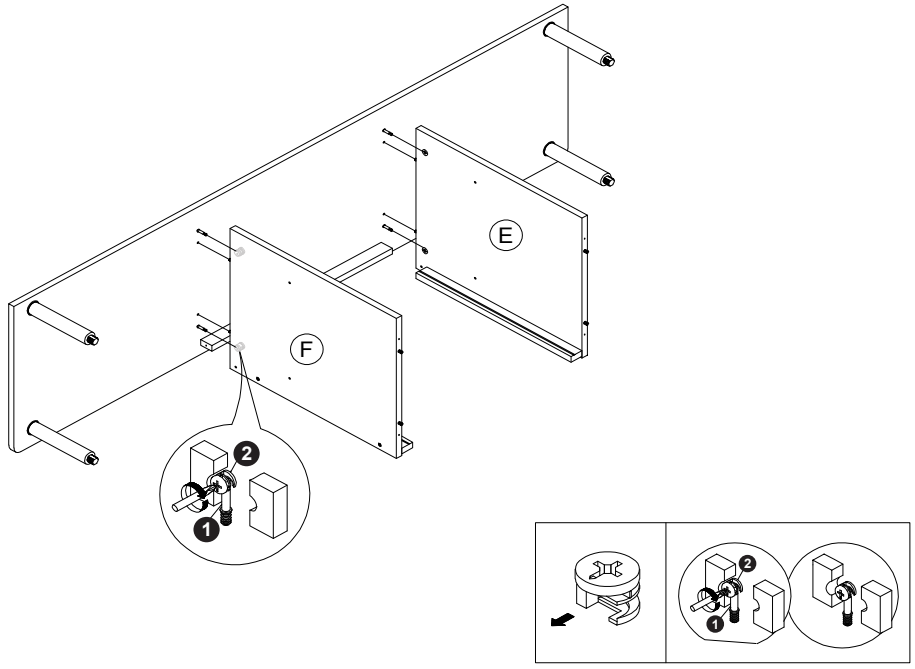

11

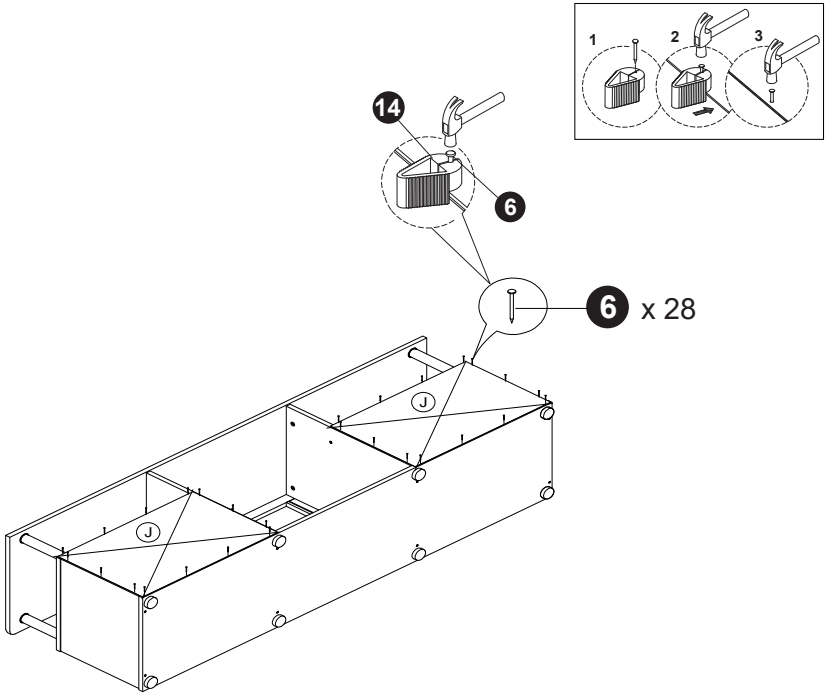

12

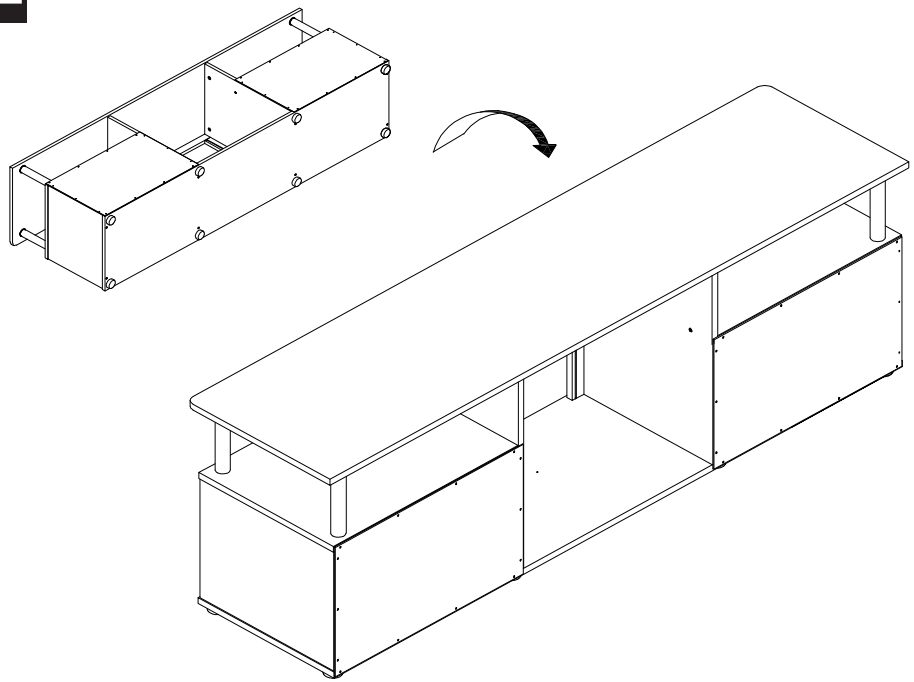

9

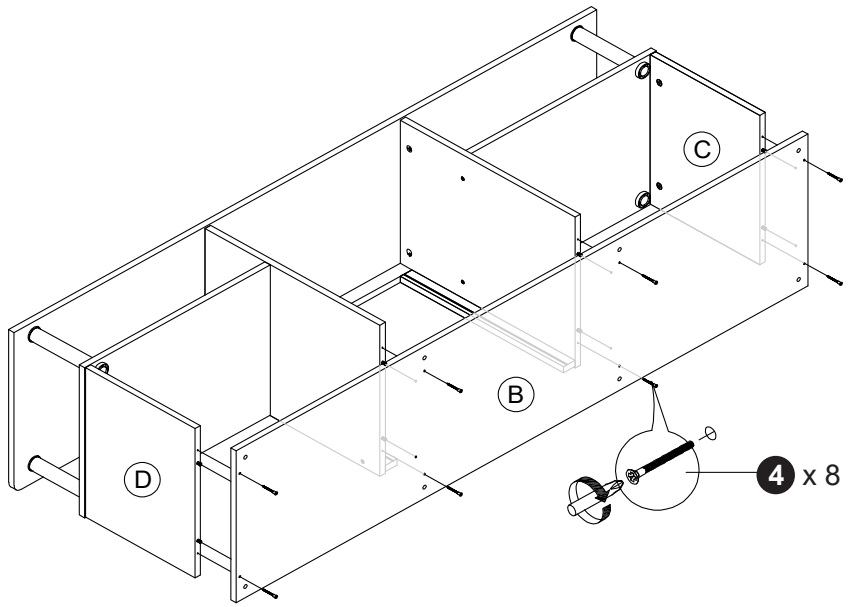

10

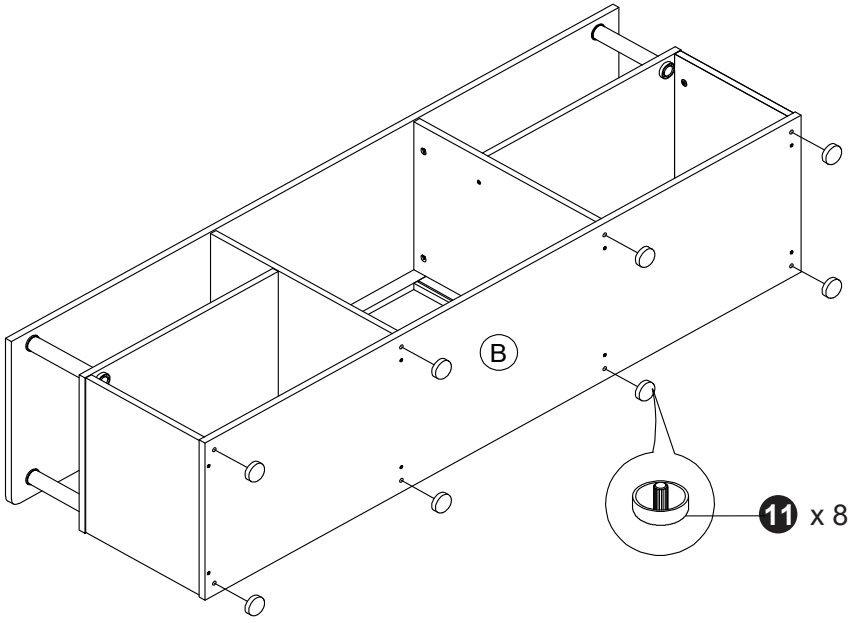

5

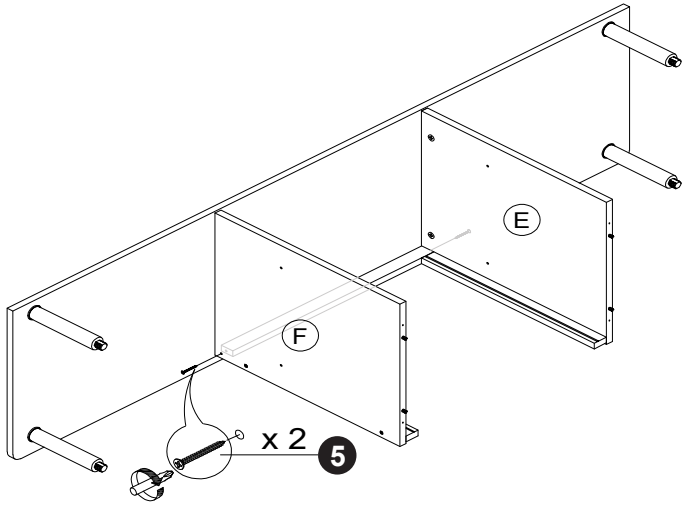

6

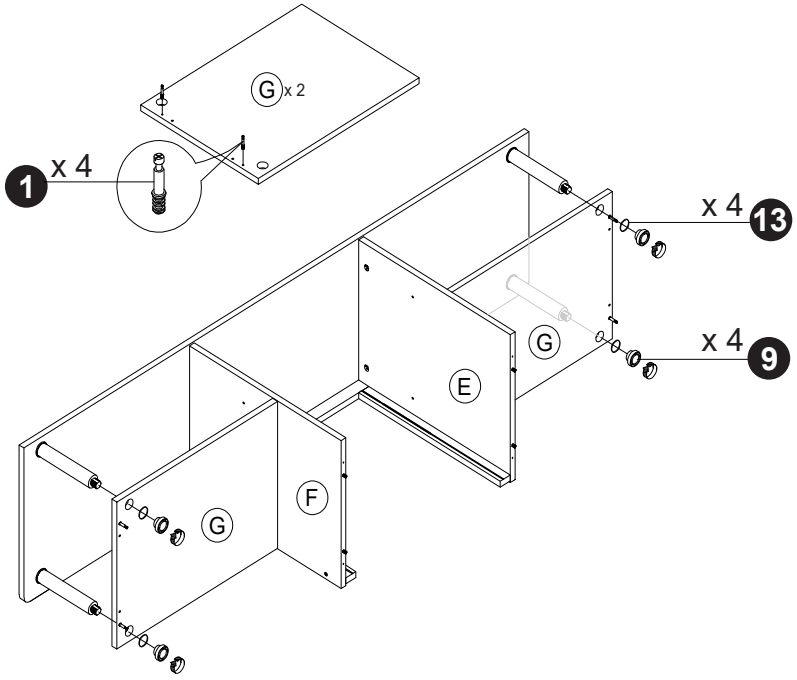

7

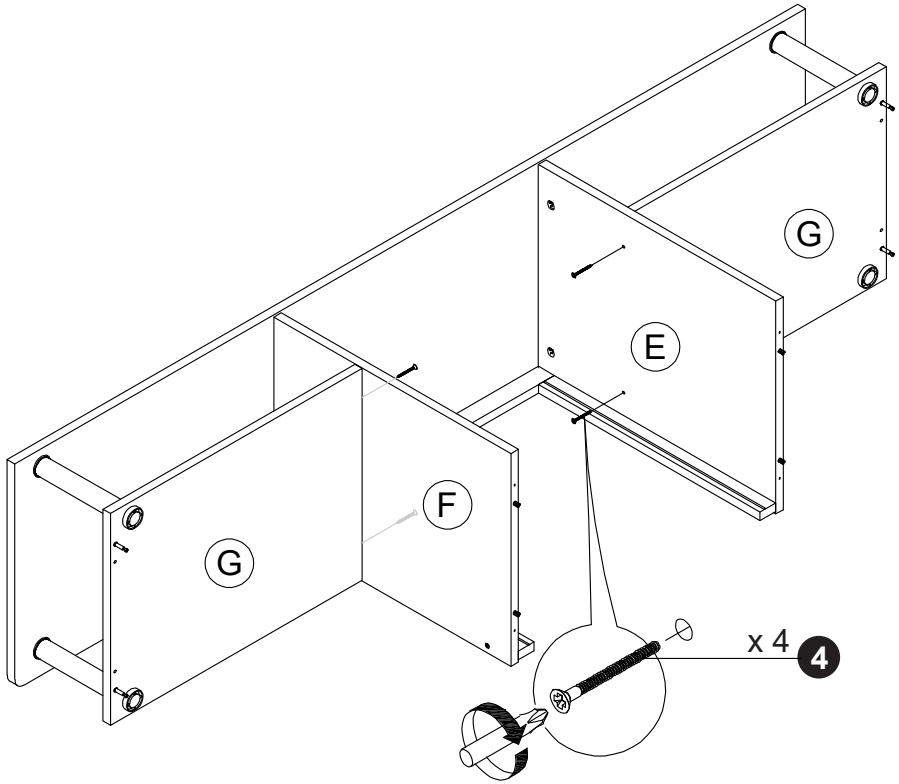

8

