Furinno®

Fits Space, Fits Budget



Assembly Instruction

Furinno Corner Fireplace TV Stand

MODEL : **22021**

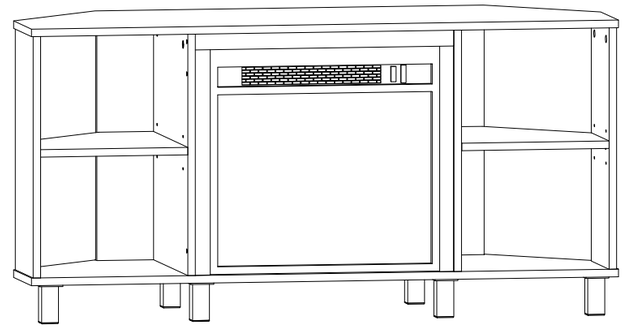

Customer Support

NEED HELP? For replacement requests or product inquiries, please contact our Customer Service Team by emailing us at **support@furinno.com**. Thank you for selecting Furinno!

www.furinno.com

2202120231103

HARDWARE & PARTS LIST

NO	HARDWARE LIST	QTY
1	MINIFIX 1a 1b	10pcs
2	WOOD DOWEL	18pcs
3	POZIHEAD SCREW	12pcs
4	C/B SCREW 32mm	6pcs
5	PWA SCREW	7pcs
6	METAL L BRACKET	1pc
7	SHELF SUPPORT	8pcs
8	LEG SCREW	24pcs
9	3” PVC LEG	6pcs
10	FIREPLACE 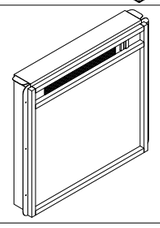	1pc

NO	PART LIST	QTY
A	TOP PANEL	1pc
B	BOTTOM PANEL	1pc
C	LEFT / RIGHT SIDE PANEL	2pcs
D	LEFT PARTITION PANEL	1pc
E	RIGHT PARTITION PANEL	1pc
F	SHELF PANEL	2pcs
G	SUPPORT PANEL	1pc
H	RAIL PANEL	2pcs
I	LEFT BACK PANEL	1pc
J	RIGHT BACK PANEL	1pc

USEFUL HINTS BEFORE YOU START:

1. Read each step carefully before starting.

2. It is important that each step is performed in correct order to avoid difficulties.

3. Identify, sort and count the parts before assembly.

4. Assemble your furniture on packaging cardboard to prevent scratch or damage.

5. Clean the product with mild cleanser using soft damped cloth. Do not use harsh or abrasive cleanser.

6. Using uncompatible hardware might cause damage to product.

Recommended Maximum Weight

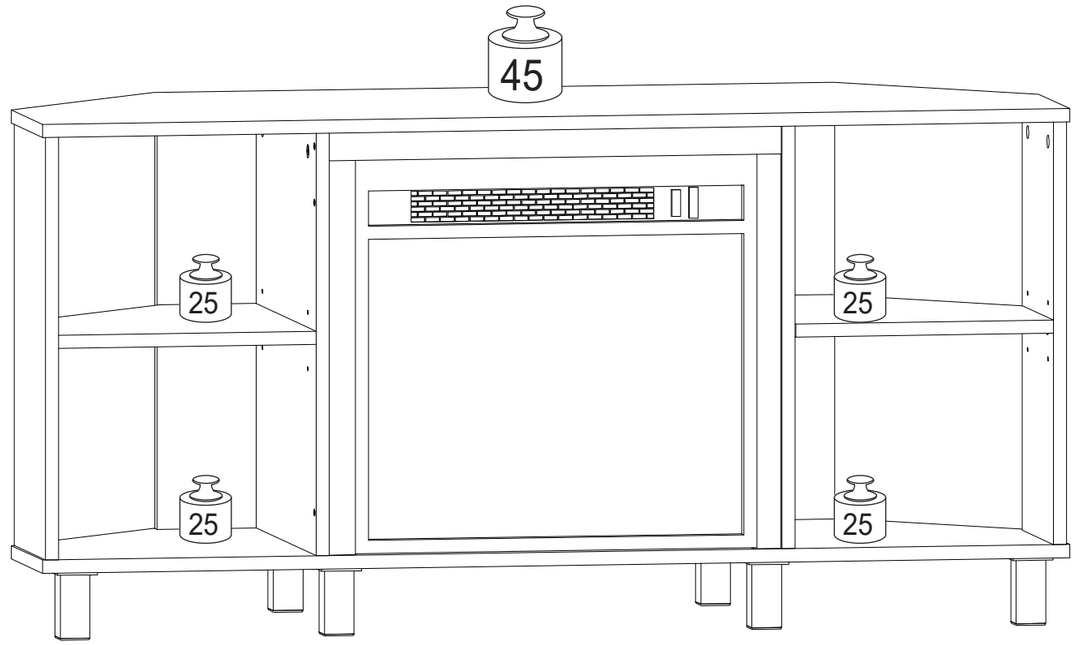

*Unit in Pound(lbs.)

WARNING:

>This unit has been designed to support the maximum loads shown. Exceeding these load limits could cause sagging, instability, product collapse, and/or serious injury.

>DO NOT allow children to climb on unit.

> Put heavier items on lower shelves.

STEP 10

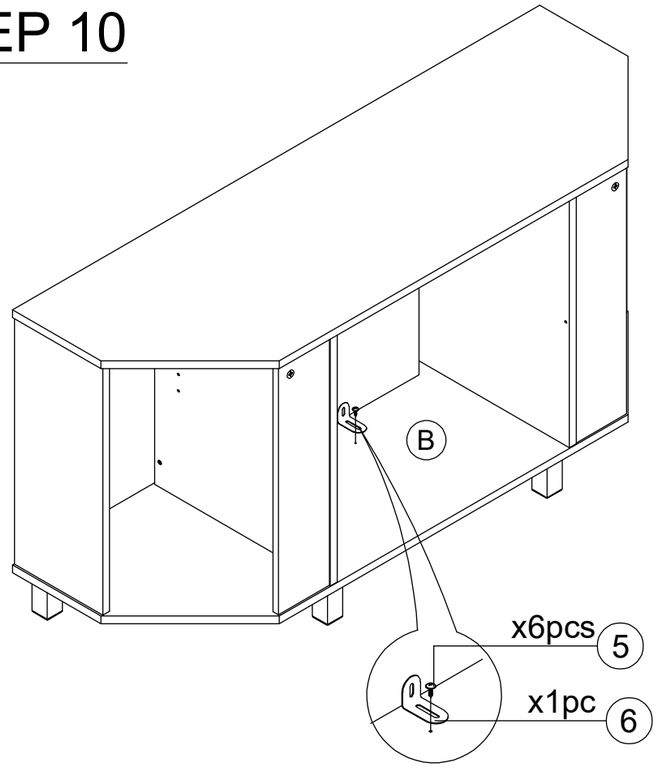

STYLE INSTALLATION	
STYLE 1	STYLE 2
B	B

STEP 11

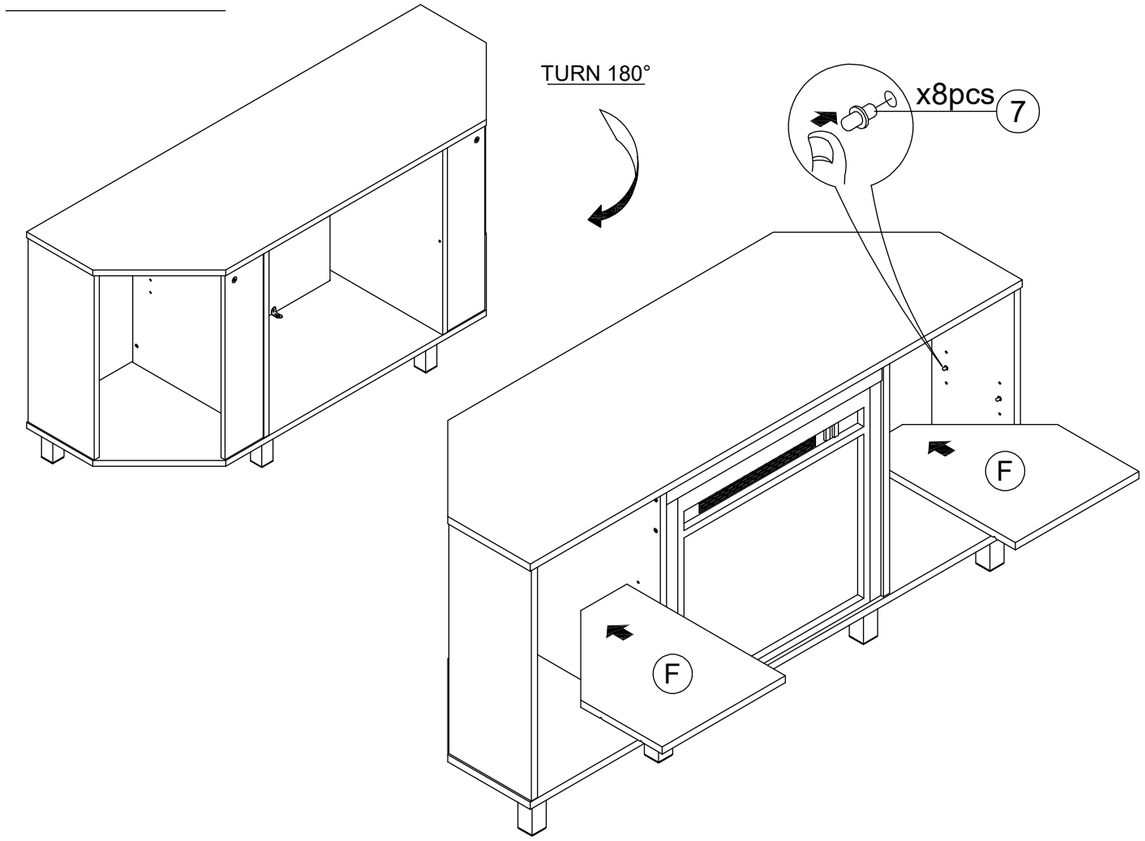

FRONT VIEW

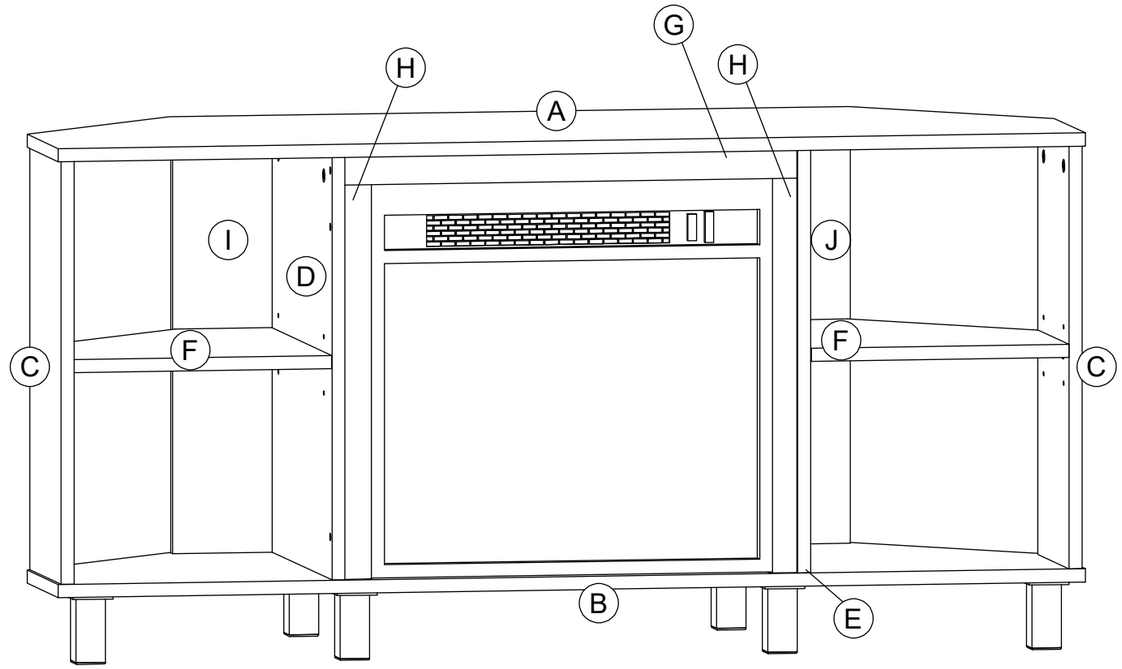

BACK VIEW

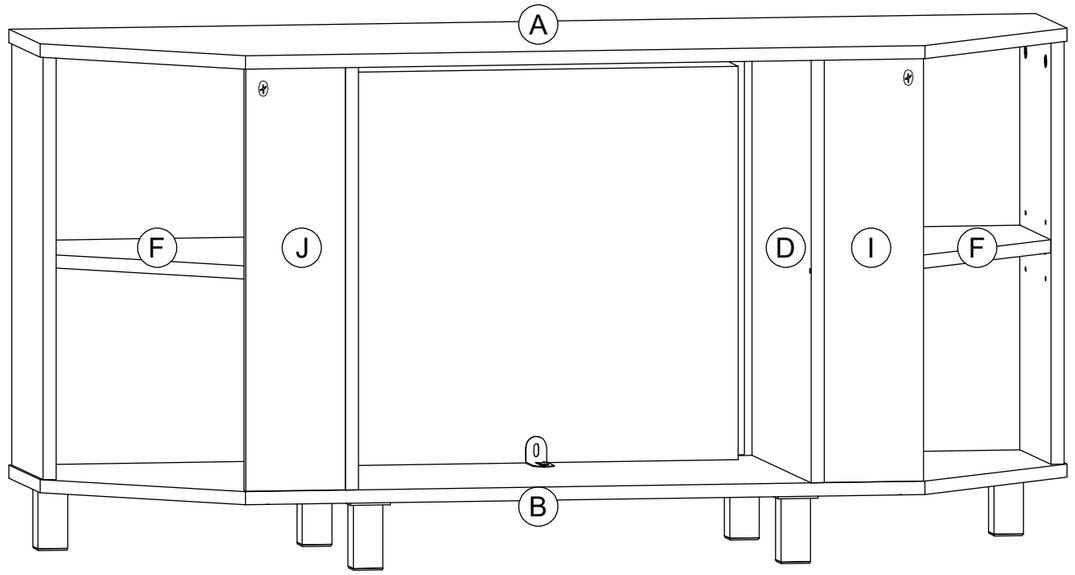

ASSEMBLY INSTRUCTIONS

BEFORE YOU BEGIN, PLEASE READ ASSEMBLY INSTRUCTIONS CAREFULLY, FOLLOW THEM STEP BY STEP.

STEP 1

Step 1.1

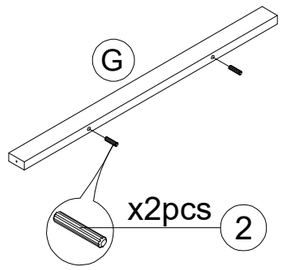

Step 1.2

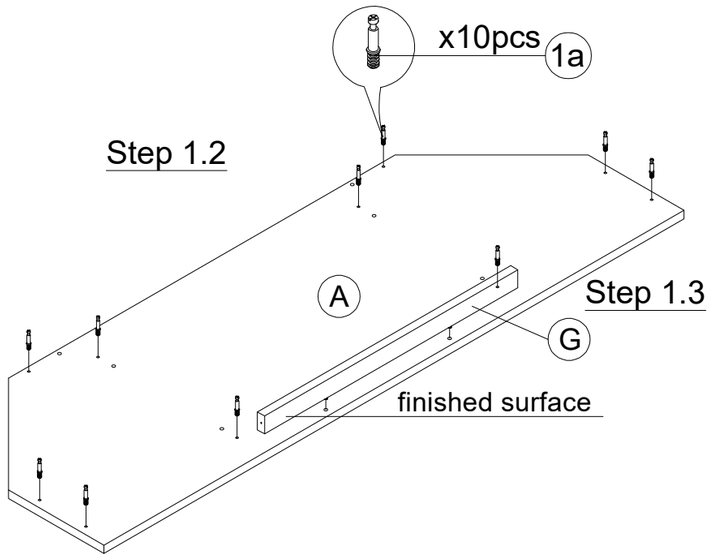

Step 1.3

STEP 2

Step 2.1

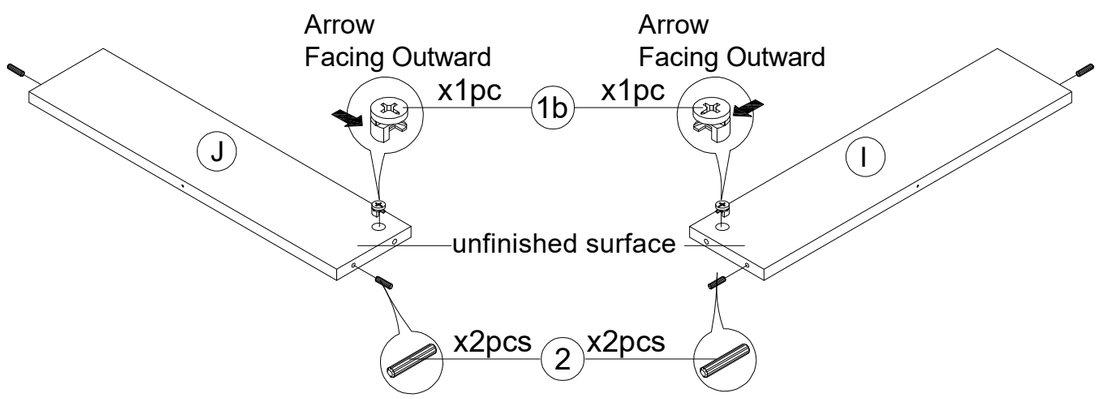

STEP 9

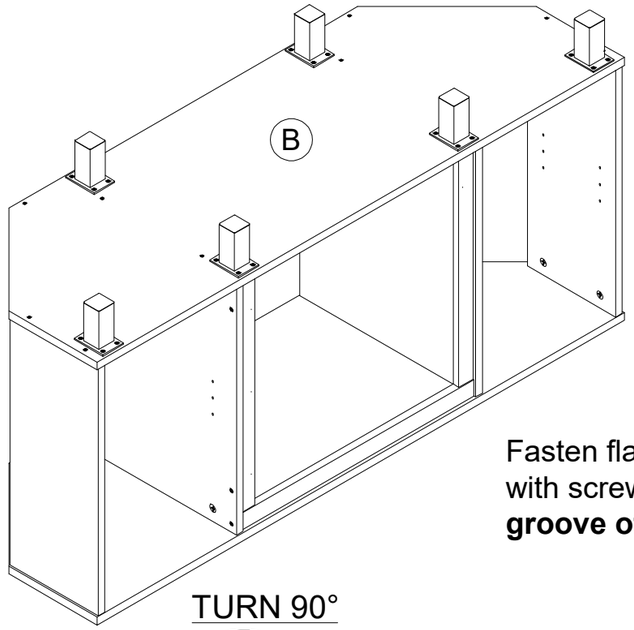

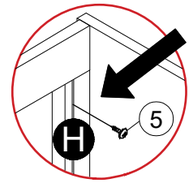

Fasten flange of fireplace to vertical rails(H) with screw (5).You will screw into the **groove of the vertical rails(H).**

TURN 90°

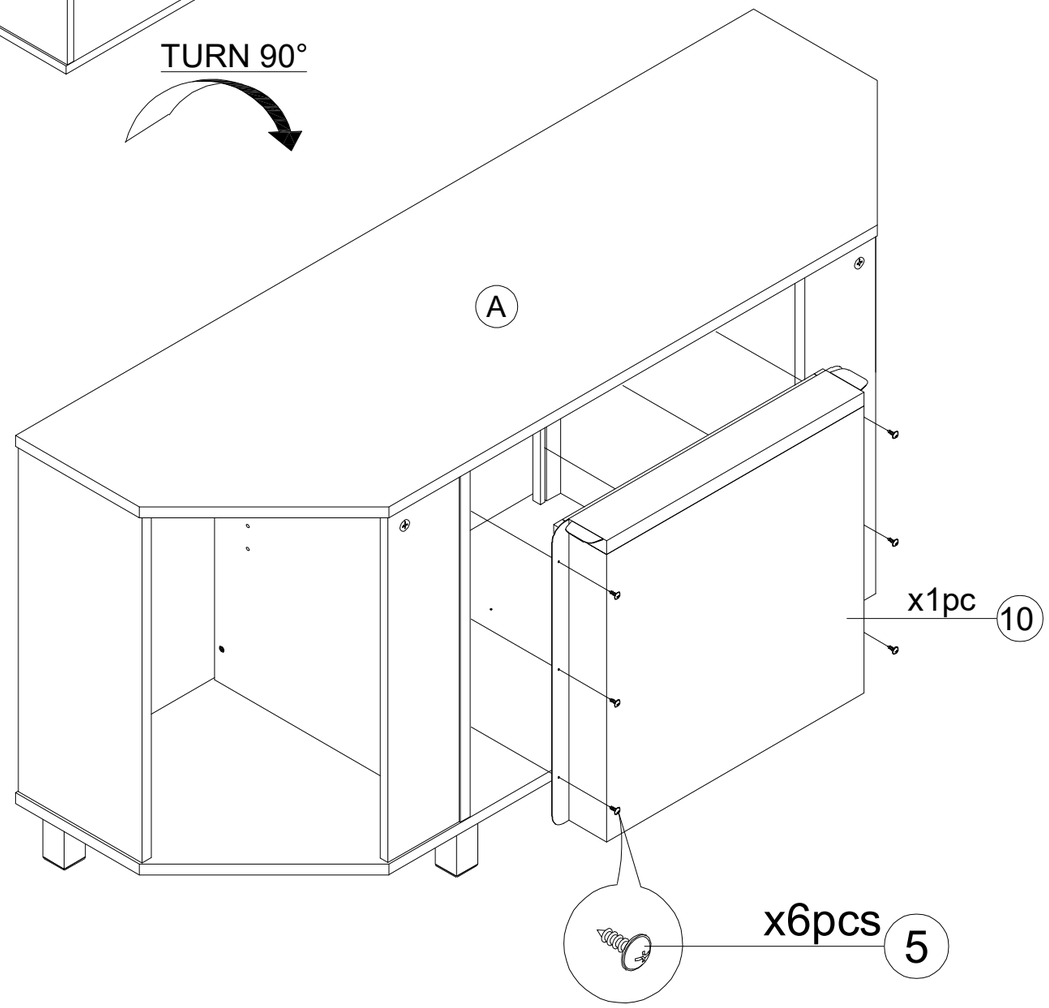

STEP 7

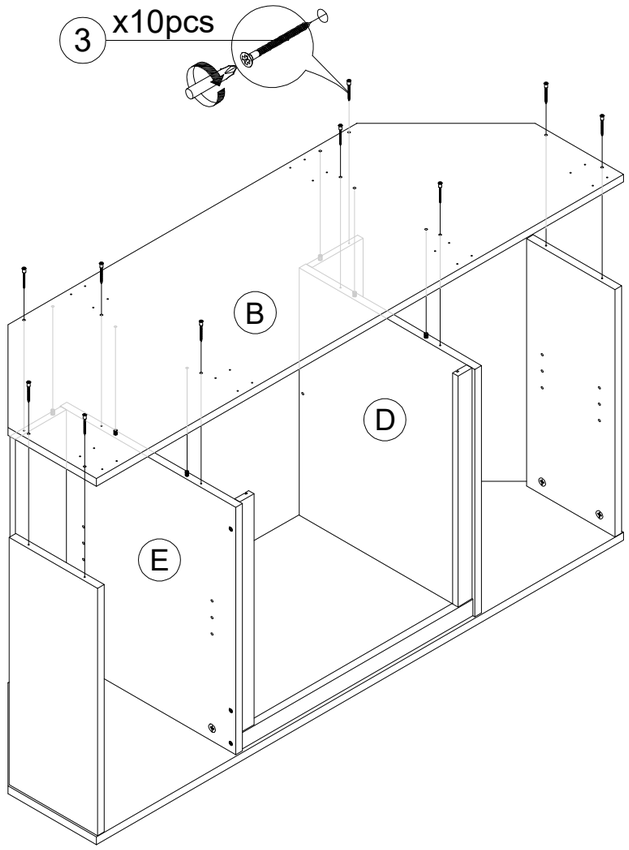

STEP 8

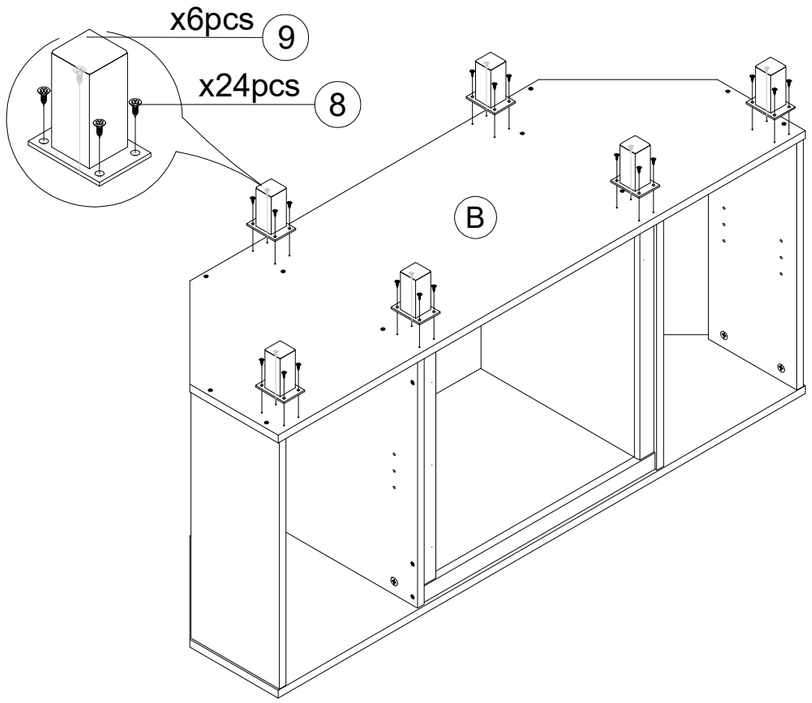

Step 2.2

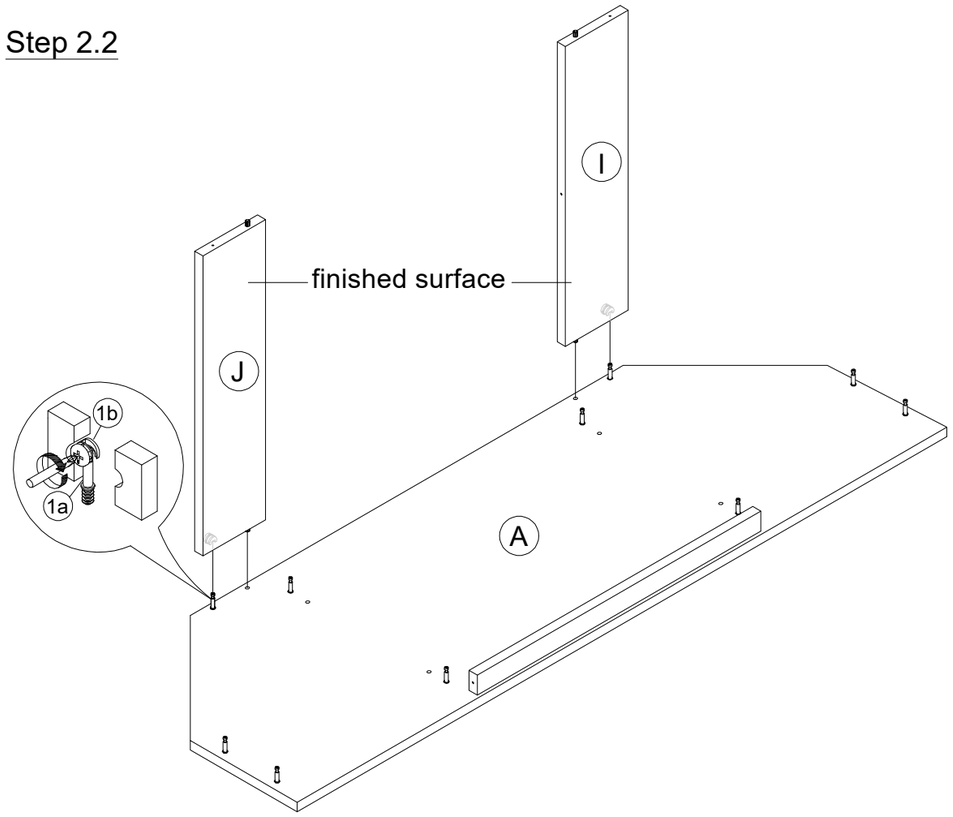

STEP 3

Step 3.1

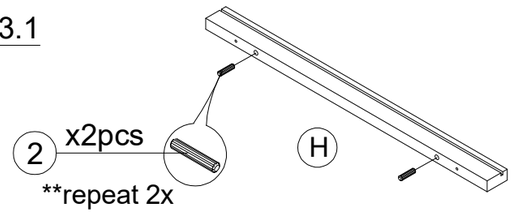

Step 3.2

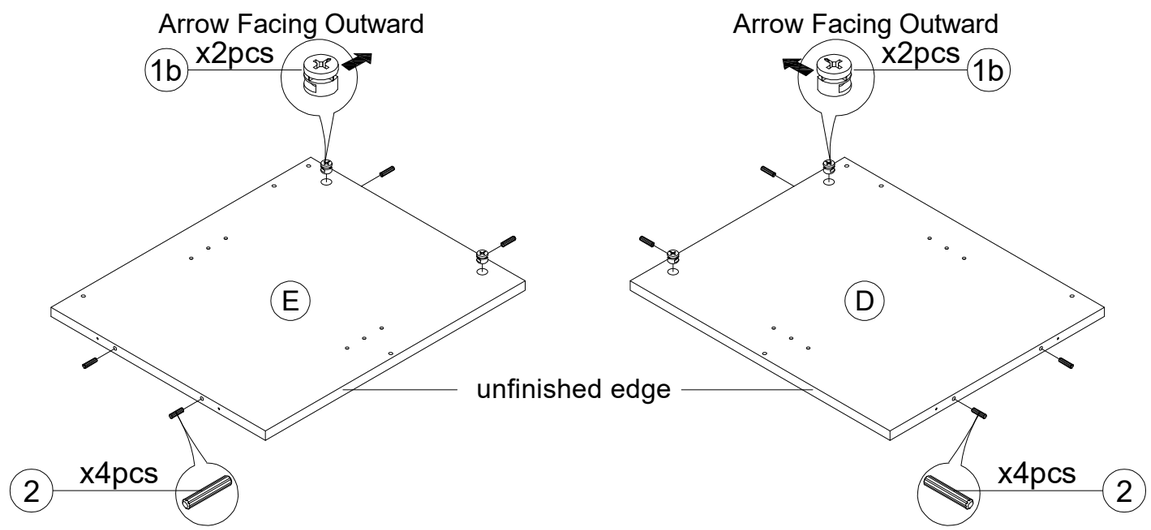

Step 3.3

Step 3.4

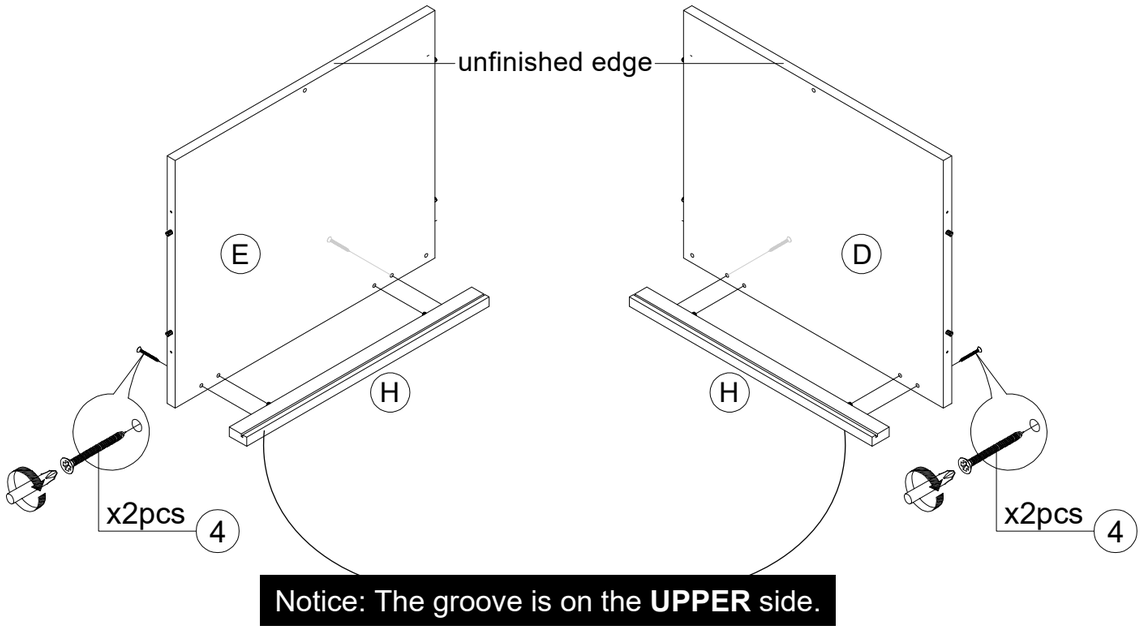

STEP 4

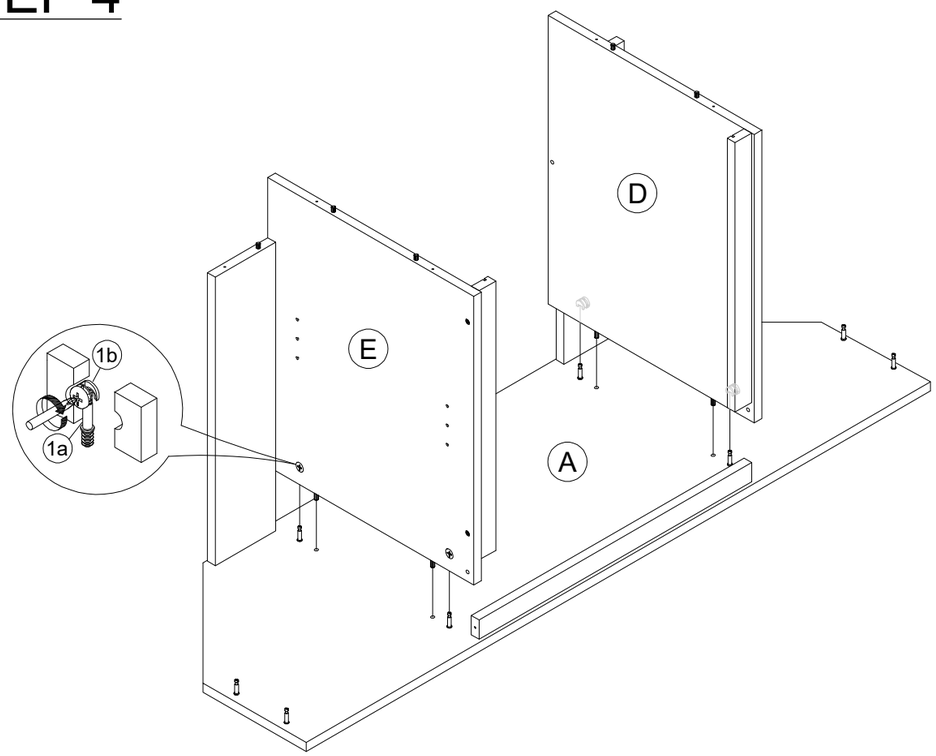

STEP 5

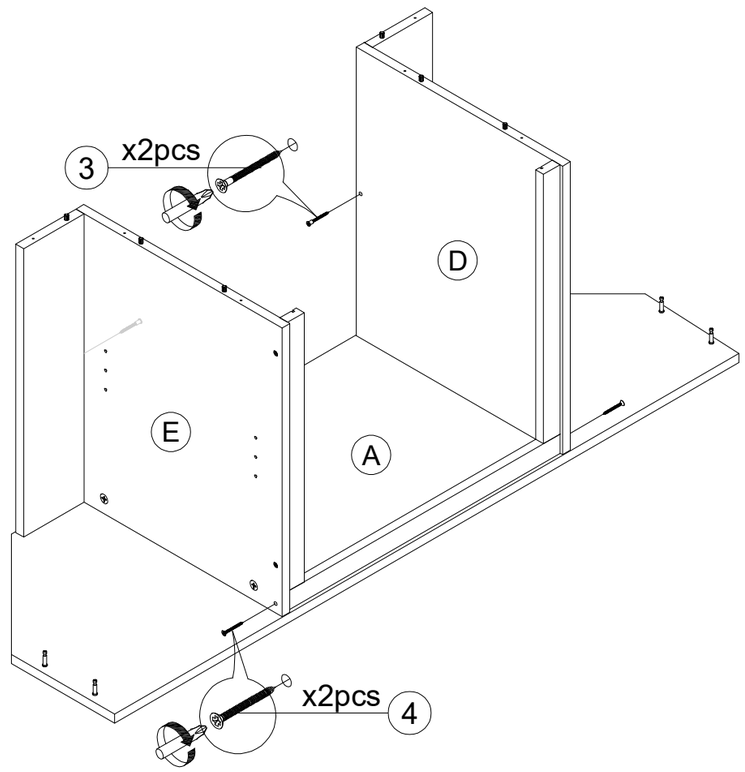

STEP 6

