STEP 5

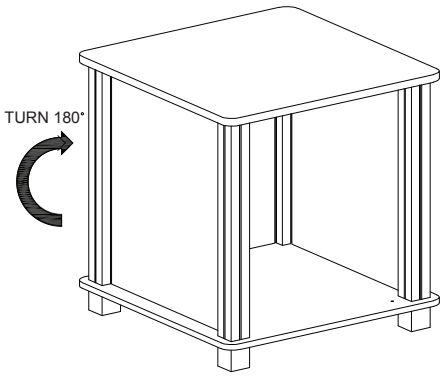

STEP 6

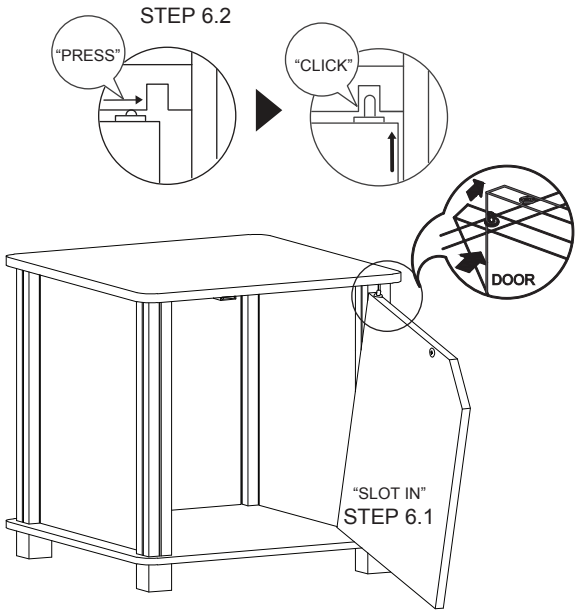

Recommended Maximum Weight

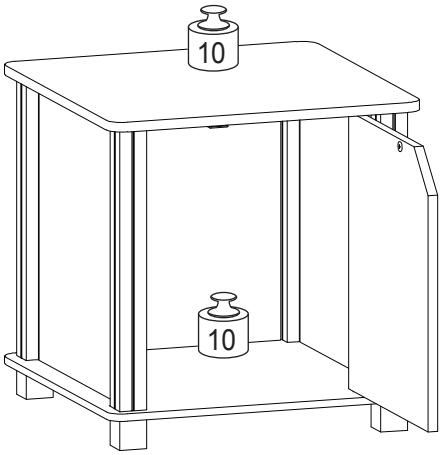

*Unit in Pound(lbs)

WARNING:

>This unit has been designed to support the maximum loads shown. Exceeding these load limits could cause sagging, instability, product collapse, and/or serious injury.

>DO NOT allow children to climb on unit.

>Put heavier items on lower shelves.

Furinno®
Fits Space. Fits Budget



Approx. 25 minutes



Recomm. 1 Person

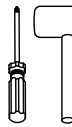

Tool Required

Assembly Instruction

Furinno End Table with Storage

MODEL : **220225 (Set of Two)**

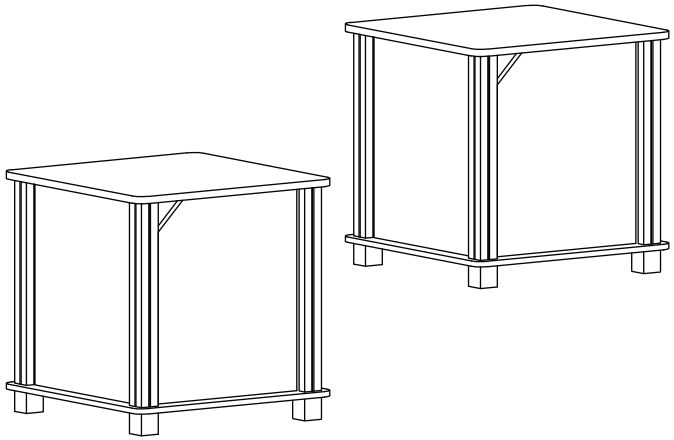

Customer Support

NEED HELP? For replacement requests or product inquiries, please contact our Customer Service Team by emailing us at **support@furinno.com**. Thank you for selecting Furinno!

www.furinno.com

22022520210315

HARDWARE AND PART LIST

NO	HARDWARE LIST	QTY
1	SQUARE LONG POLE W/ GROOVE 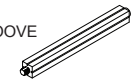	8 PCS
2	SQUARE LEG 	8 PCS
3	MAGNET 	2 PCS
4	FLAT HEAD SCREW 	2 PCs
5	DOOR SPRING 	4 PCS

NO	PART LIST	QTY
A	TOP PANEL	2 PCS
B	BOTTOM PANEL	2 PCS
C	DOOR PANEL	2 PCS
D	SIDE PANEL	6 PCS

*All Hardware & Part quantity are for two sets.

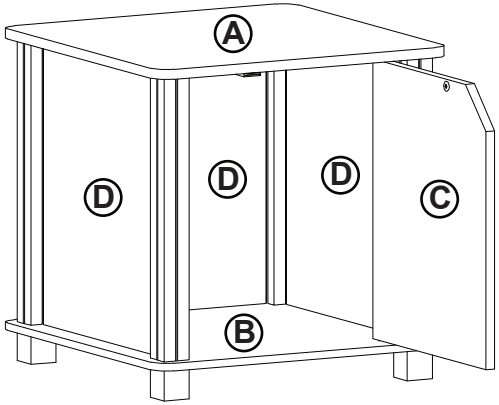

USEFUL HINTS BEFORE YOU START:

1. Read each step carefully before starting.
2. It is important that each step is performed in correct order to avoid difficulties.
3. Identify, sort and count the parts before assembly.
4. Assemble your furniture on packaging cardboard to prevent scratch or damage.
5. Clean the product with mild cleanser using soft damped cloth. Do not use harsh or abrasive cleanser.
6. Using uncompatible hardware might cause damage to product.

STEP 1

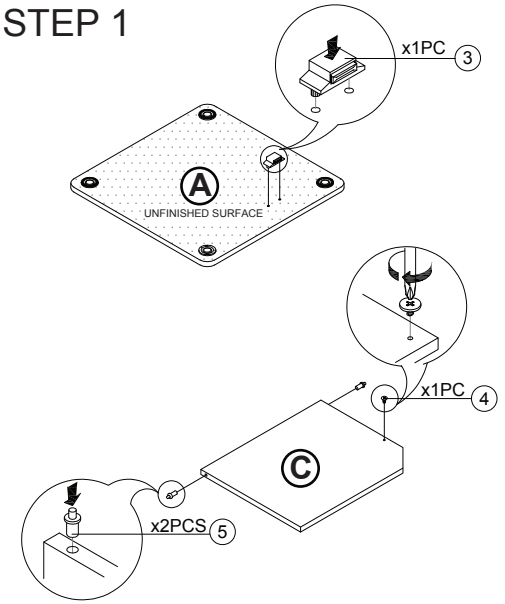

STEP 2

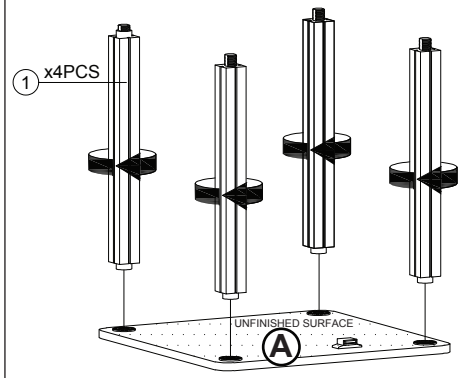

STEP 3

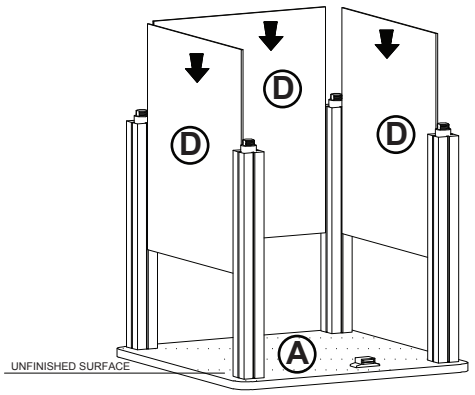

STEP 4

= at front side

