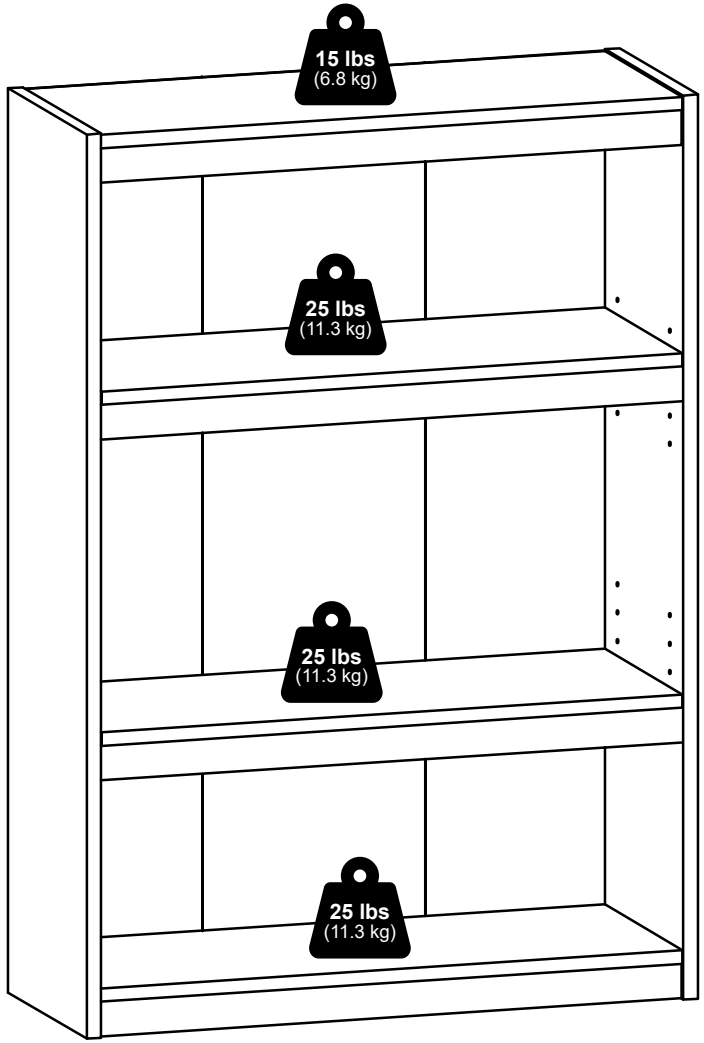

Furinno®

Fits Space, Fits Budget



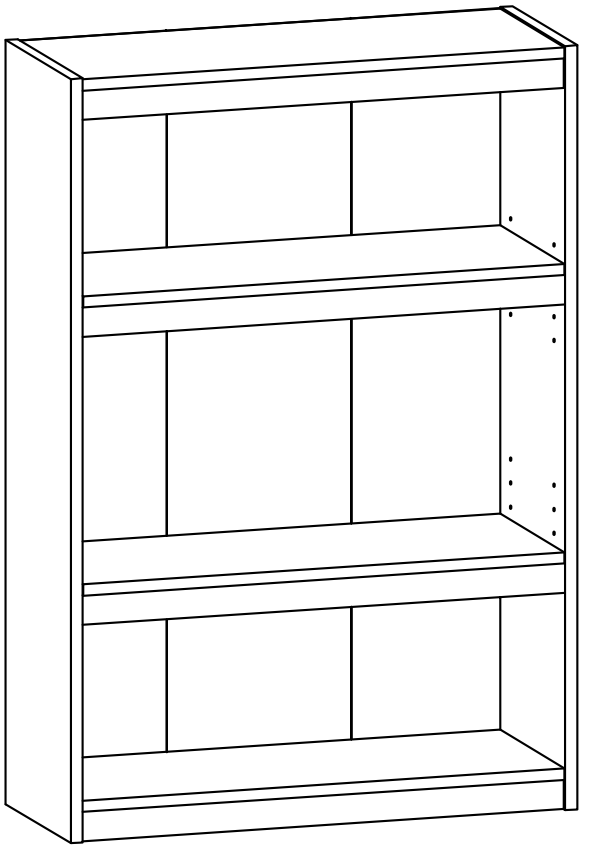

MODEL: 22061

support@furinno.com

www.furinno.com

2206120230531

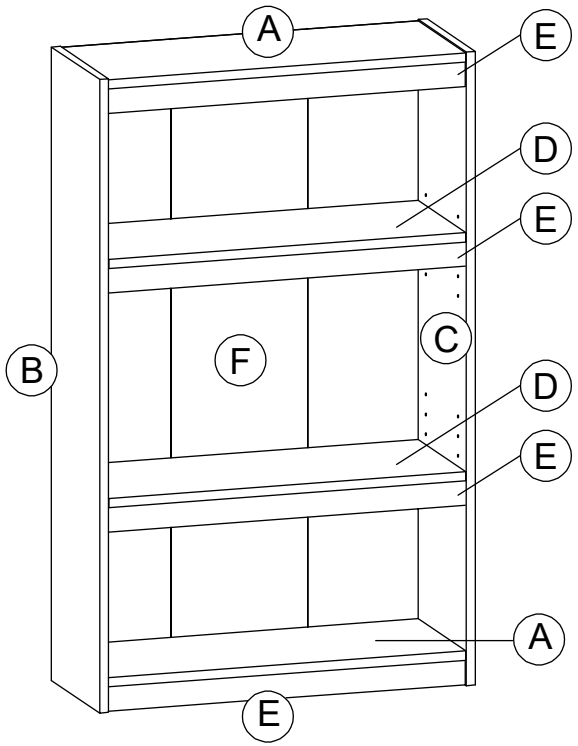

1 x 8 M6 x 31mm	**2** x 8 15mm	**3** x 8 17 x 22mm	**4** x 16 M4 x 11mm
5 x 8 5 x 6 x 16mm	**6** x 28 2.5 x 18mm	**7** x 1 (7a) (7b) (7c) (7d)	**8** x 1

7

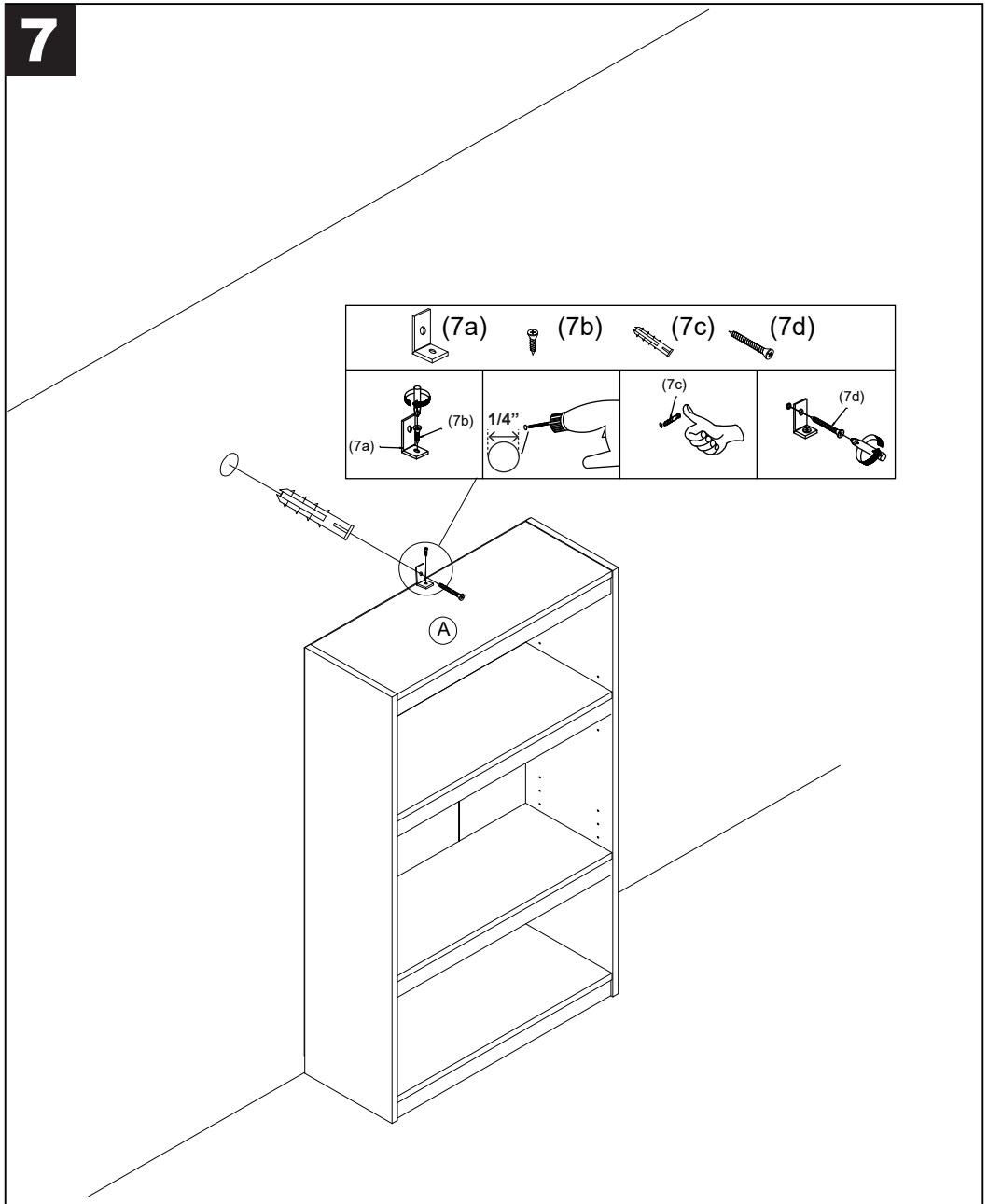

5

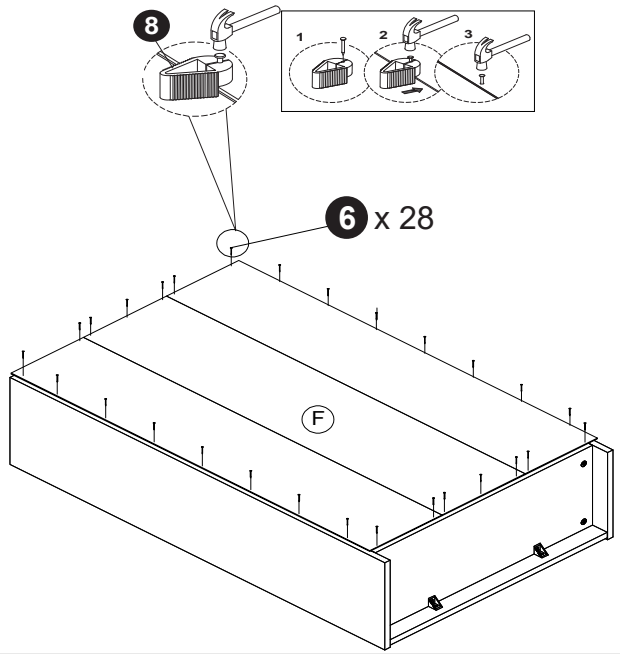

6

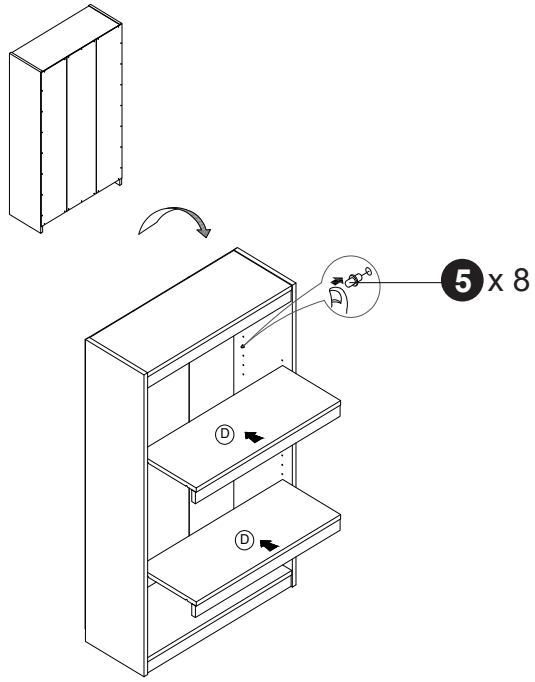

1

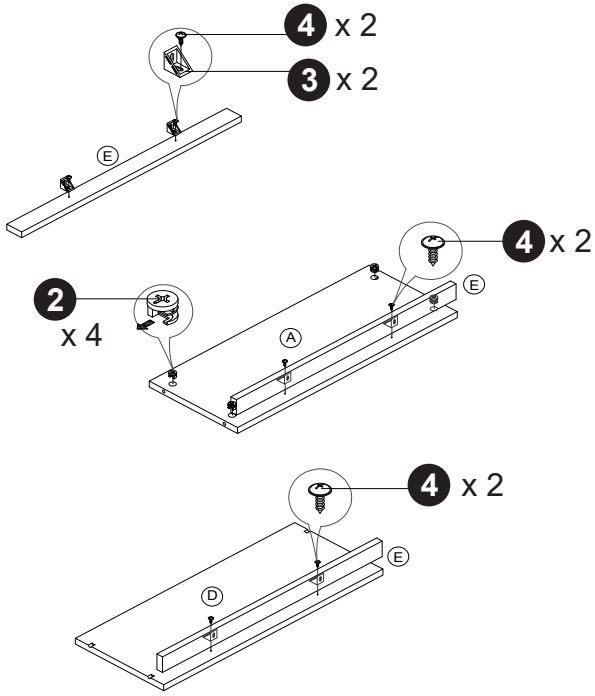

2

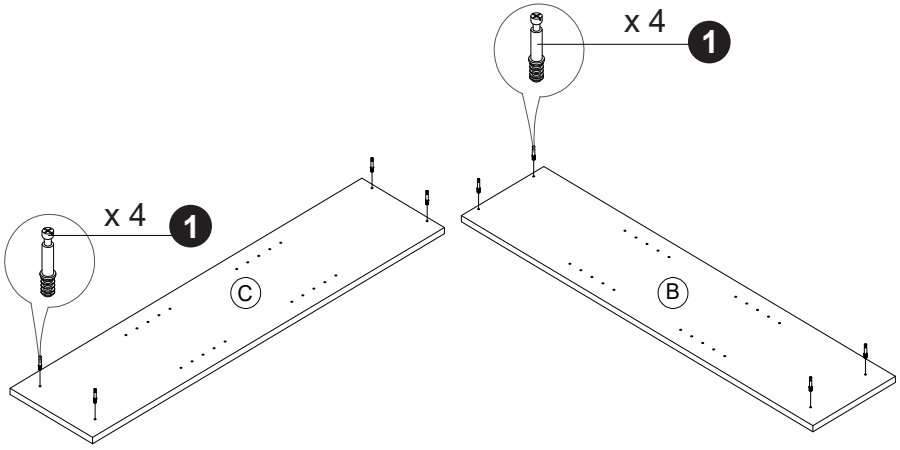

3

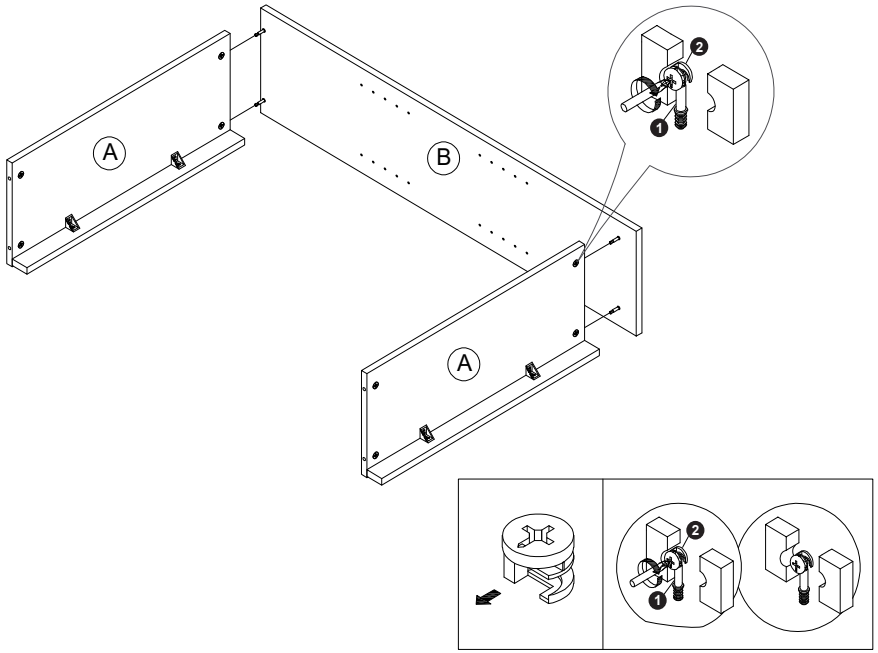

4

