STEP 11

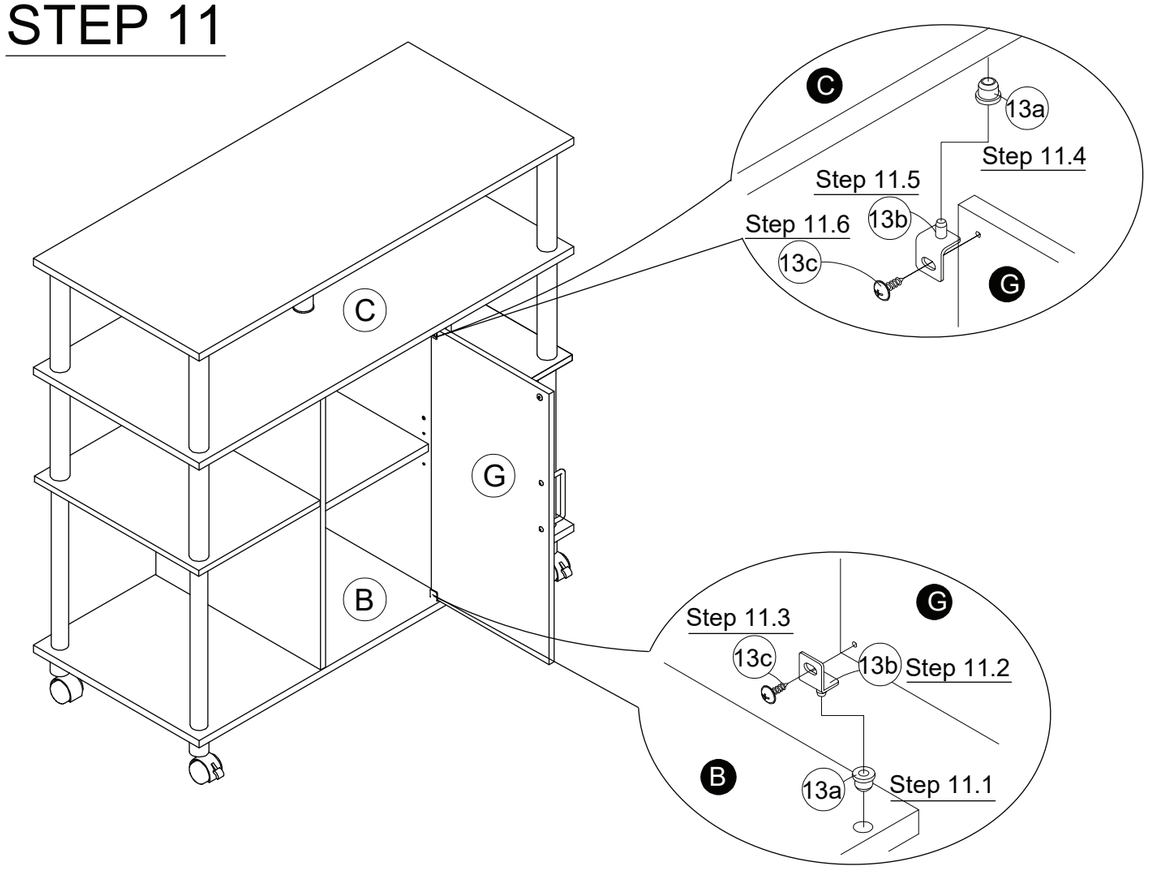

Recommended Maximum Weight

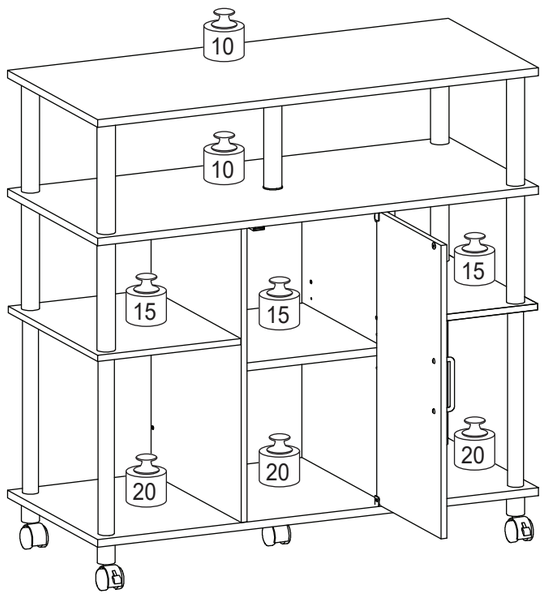

*Unit in Pound(lbs.)

WARNING:

>This unit has been designed to support the maximum loads shown. Exceeding these load limits could cause sagging, instability, product collapse, and/or serious injury.

>DO NOT allow children to climb on unit.

> Put heavier items on lower shelves.

Furinno®

Fits Space, Fits Budget

00:30

Approx. 30 minutes

Recomm. 2 Person

Tools Required

Assembly Instruction

Furinno Kitchen Cart

MODEL : **22064**

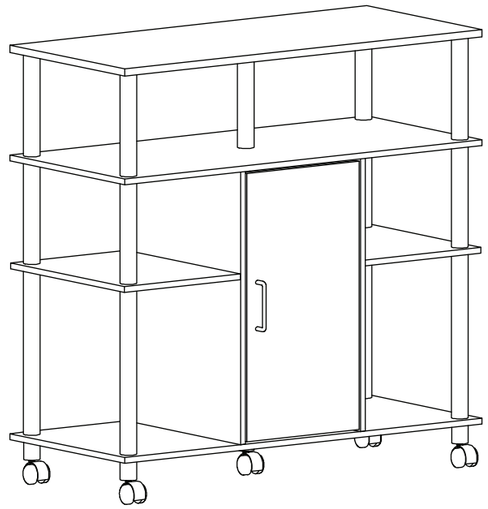

Customer Support

NEED HELP? For replacement requests or product inquiries, please contact our Customer Service Team by emailing us at **support@furinno.com**. Thank you for selecting Furinno!

www.furinno.com

2206420220616

HARDWARE & PARTS LIST

NO	HARDWARE LIST	QTY
1	MEDIUM POLE	9pcs
2	LONG POLE	4pcs
3	ROUND LEG + CASTER WITH LOCK	2pcs
4	ROUND LEG + CASTER FREE	3pcs
5	MINIFIX (5a) (5b)	4pcs
6	WOOD DOWEL	8pcs
7	POZIHEAD SCREW	12pcs
8	SHELF SUPPORT	4pcs
9	U SHAPE HANDLE	1pc
10	HANDLE SCREW	2pcs
11	MAGNET	1pc
12	TAPPING SCREW	1pc
13	HINGE KIT 13a 13b 13c	2sets
14	TOP CAP	1pc
15	PVC ROUND RING	1pc
16	MINI ROUND LEG	1pc

NO	PART LIST	QTY
A	TOP PANEL	1pc
B	BOTTOM PANEL	1pc
C	CENTER PANEL	1pc
D	LEFT SIDE PANEL	1pc
E	RIGHT SIDE PANEL	1pc
F	ADJUSTABLE SHELF	1pc
G	DOOR PANEL	1pc
H	SIDE SHELF PANEL	2pcs
I	BACK PANEL	1pc

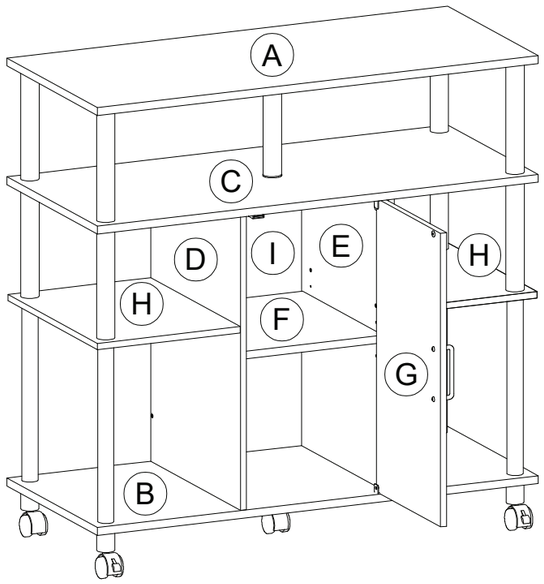

USEFUL HINTS BEFORE YOU START:

1. Read each step carefully before starting.
2. It is important that each step is performed in correct order to avoid difficulties.
3. Identify, sort and count the parts before assembly.
4. Assemble your furniture on packaging cardboard to prevent scratch or damage.
5. Clean the product with mild cleanser using soft damped cloth. Do not use harsh or abrasive cleanser.
6. Using uncompatible hardware might cause damage to product.

STEP 9

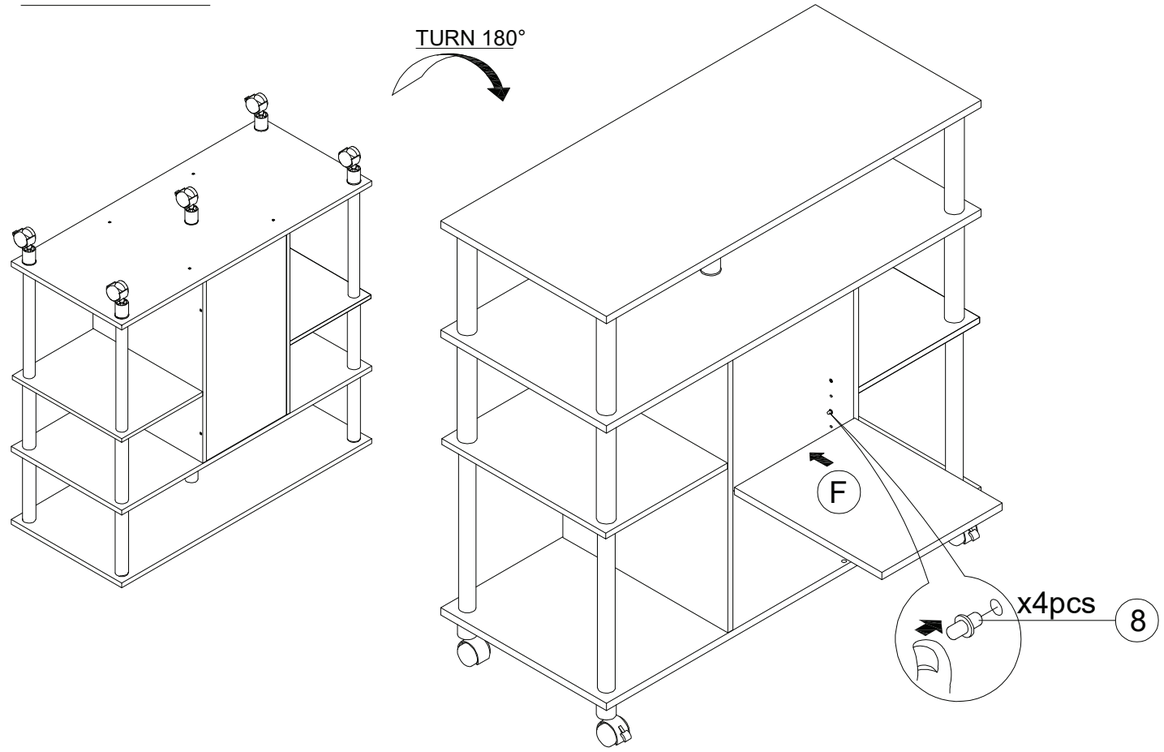

STEP 10

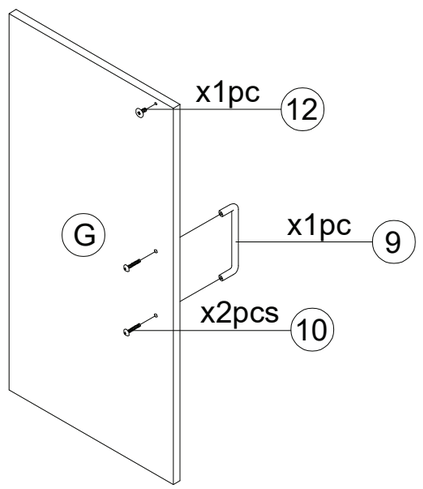

STEP 7

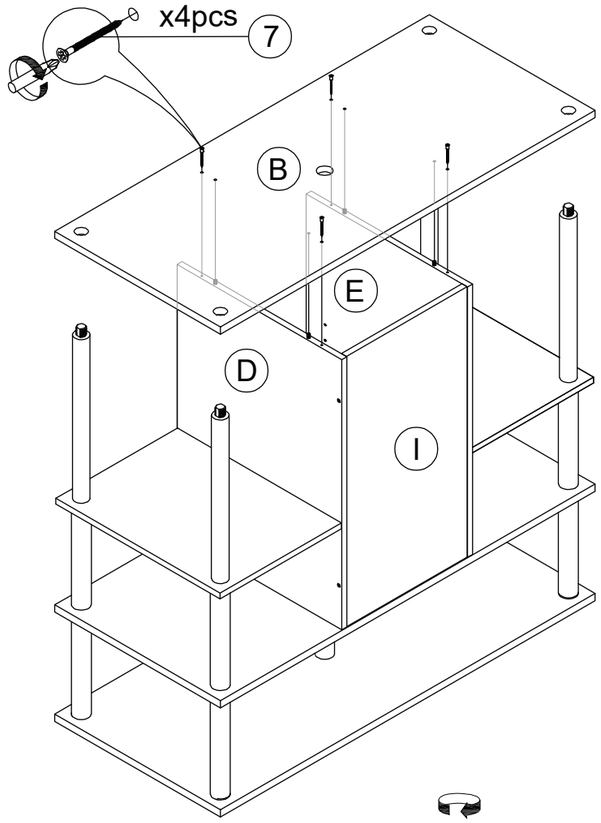

STEP 8

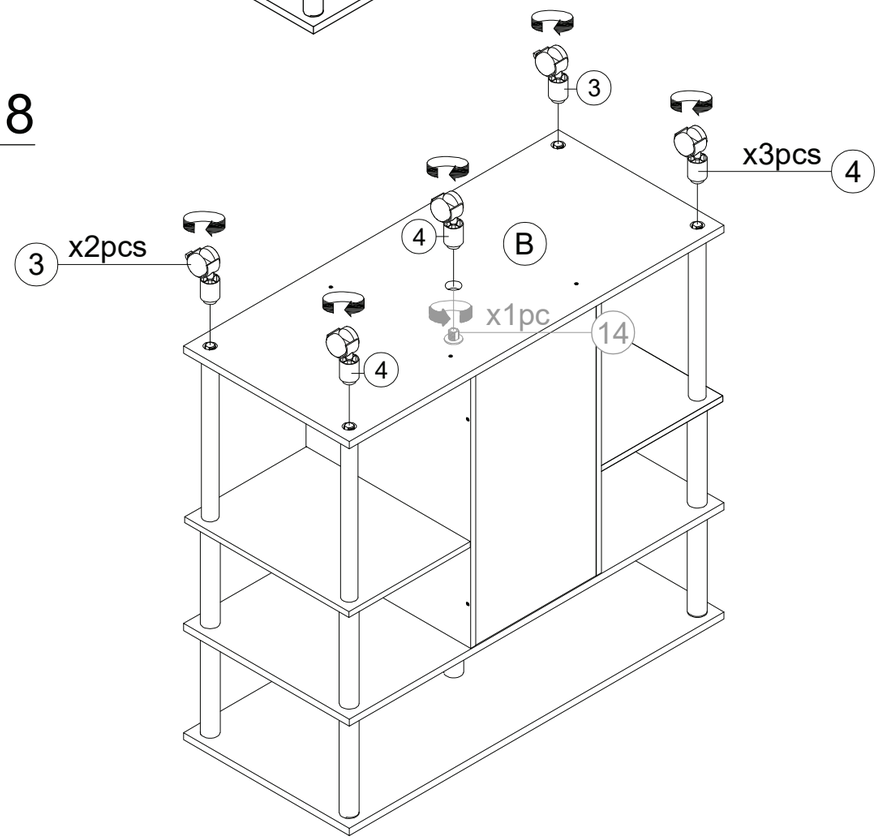

ASSEMBLY INSTRUCTIONS

BEFORE YOU BEGIN, PLEASE READ ASSEMBLY INSTRUCTIONS CAREFULLY, FOLLOW THEM STEP BY STEP.

STEP 1

Step 1.1

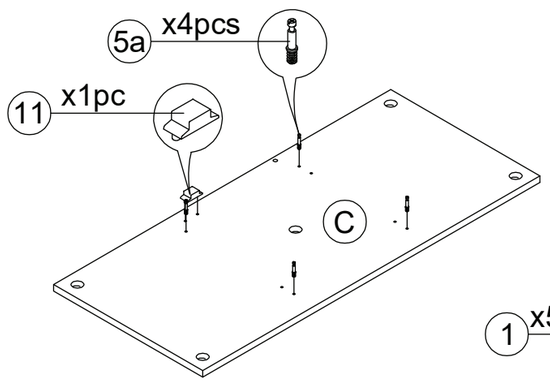

Step 1.2

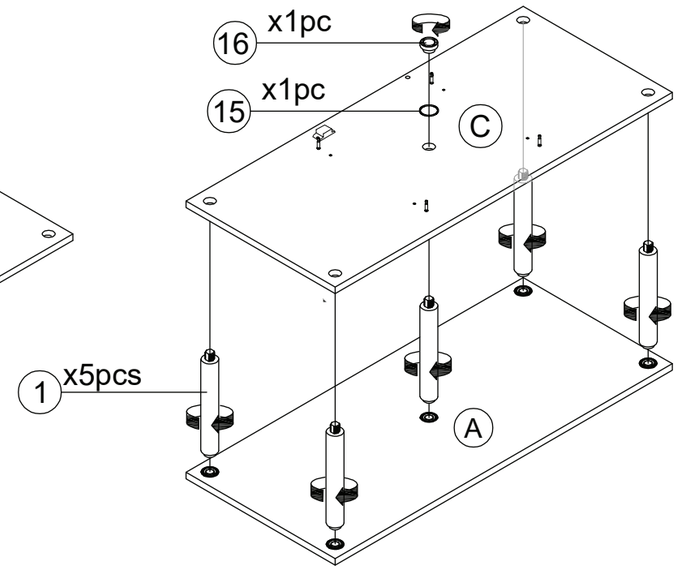

STEP 2

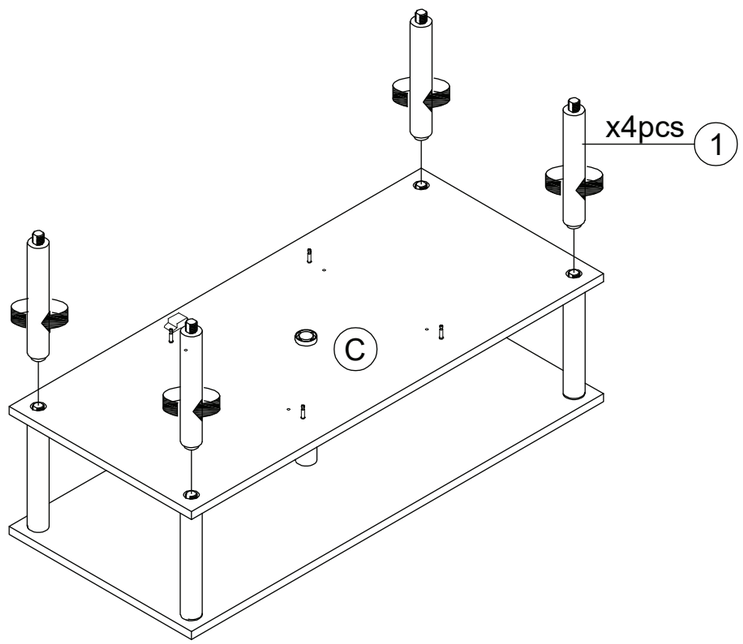

STEP 3

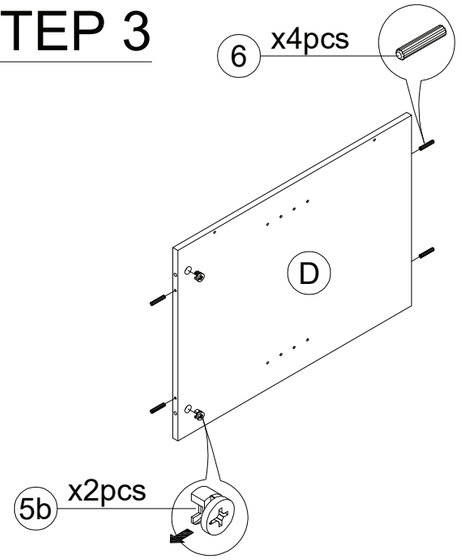

Arrow Facing Outward

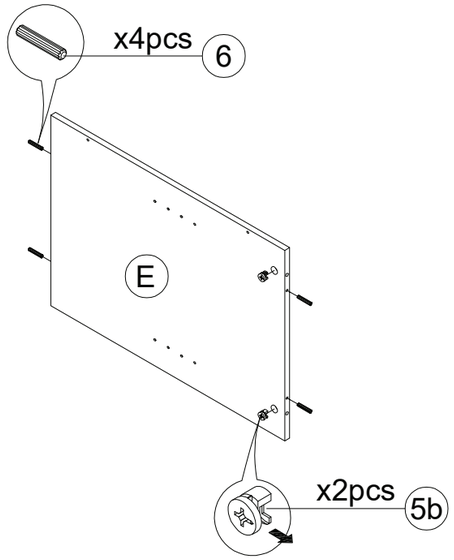

Arrow Facing Outward

STEP 4

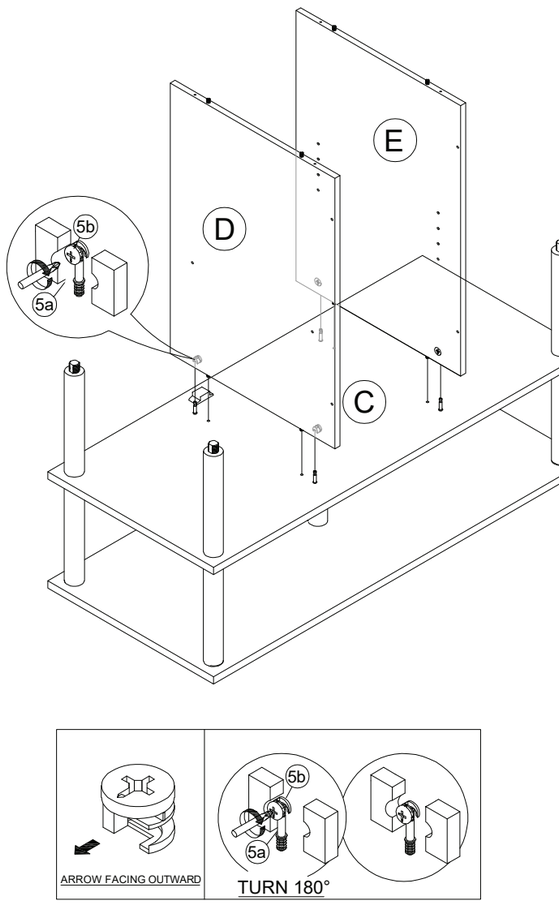

STEP 5

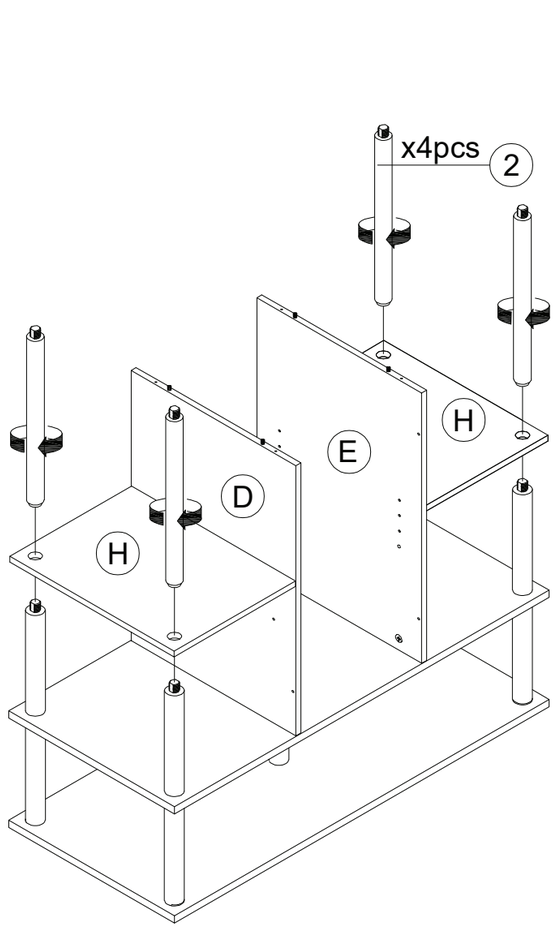

STEP 5

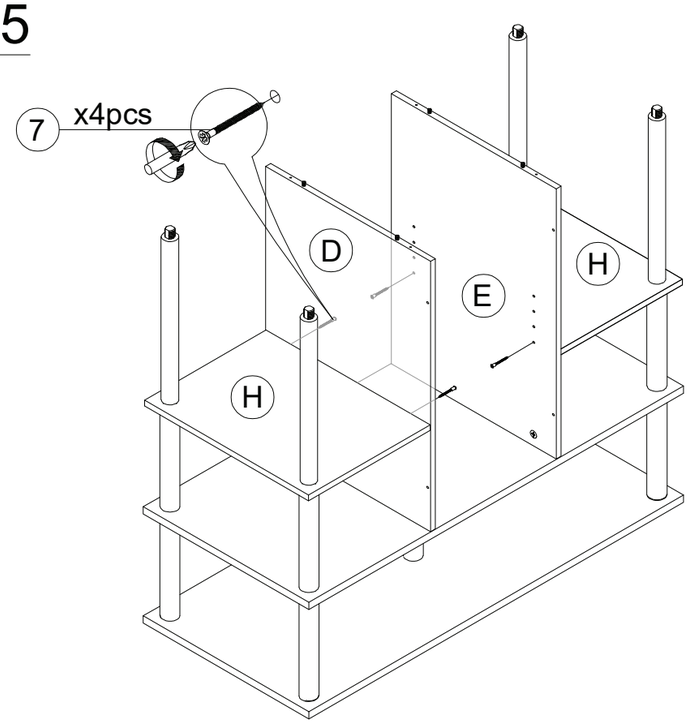

STEP 6

