Recommended Maximum Weight

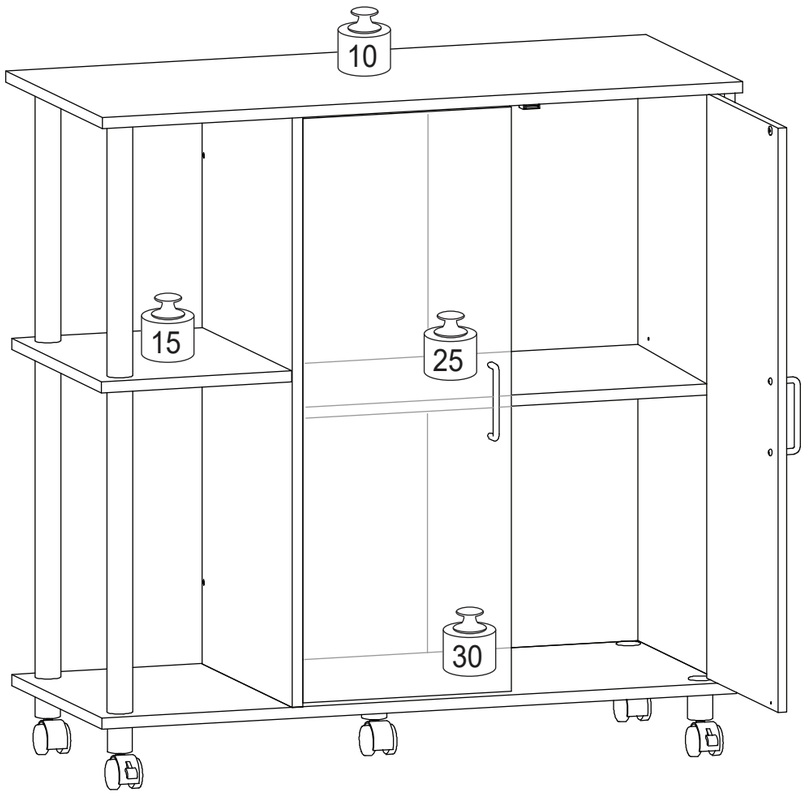

*Unit in Pound(lbs.)

WARNING:

>This unit has been designed to support the maximum loads shown. Exceeding these load limits could cause sagging, instability, product collapse, and/or serious injury.

>DO NOT allow children to climb on unit.

> Put heavier items on lower shelves.

Furinno®

Fits Space, Fits Budget



Approx. 30 minutes

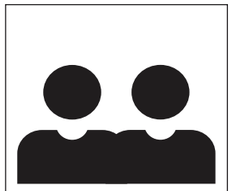

Recomm. 2 Person

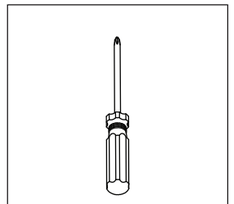

Tools Required

Assembly Instruction

Furinno Kitchen Cart

MODEL : **22066**



Customer Support

NEED HELP? For replacement requests or product inquiries, please contact our Customer Service Team by emailing us at **support@furinno.com**. Thank you for selecting Furinno!

www.furinno.com

2206620220524

HARDWARE & PARTS LIST

NO	HARDWARE LIST	QTY
1	SS EXTRA LONG POLE	2pcs
2	SS LONG POLE	2pcs
3	ROUND LEG + CASTER WITH LOCK	2pcs
4	ROUND LEG + CASTER FREE	3pcs
5	MINIFIX (5a) (5b)	8pcs
6	WOOD DOWEL	10pcs
7	POZIHEAD SCREW	14pcs
8	SHELF SUPPORT	4pcs
9	U SHAPE HANDLE	2pcs
10	HANDLE SCREW	4pcs
11	MAGNET	2pcs
12	TAPPING SCREW	2pcs
13	HINGE KIT 13a 13b 13c	4sets
14	TOP CAP	3pcs

NO	PART LIST	QTY
A	TOP PANEL	1pc
B	BOTTOM PANEL	1pc
C	PARTITION PANEL	1pc
D	RIGHT SIDE PANEL	1pc
E	SIDE SHELF PANEL	1pc
F	ADJUSTABLE SHELF	1pc
G	DOOR PANEL	2pcs
H	LEFT BACK PANEL	1pc
I	RIGHT BACK PANEL	1pc

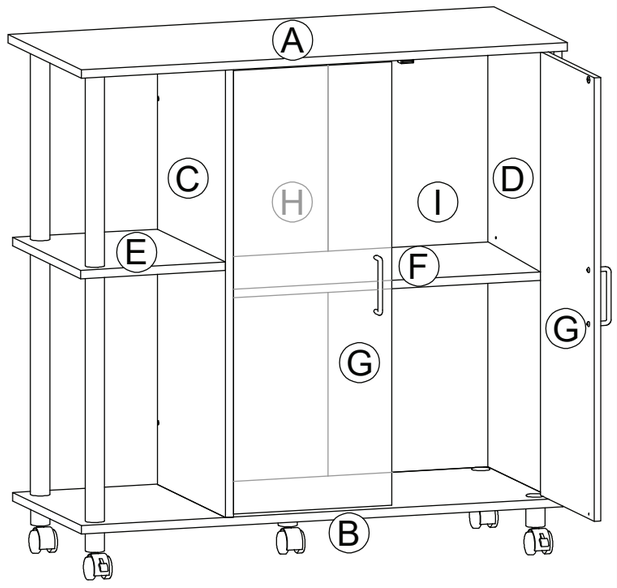

USEFUL HINTS BEFORE YOU START:

1. Read each step carefully before starting.
2. It is important that each step is performed in correct order to avoid difficulties.
3. Identify, sort and count the parts before assembly.
4. Assemble your furniture on packaging cardboard to prevent scratch or damage.
5. Clean the product with mild cleanser using soft damped cloth. Do not use harsh or abrasive cleanser.
6. Using uncompatible hardware might cause damage to product.

STEP 7

Step 7.1

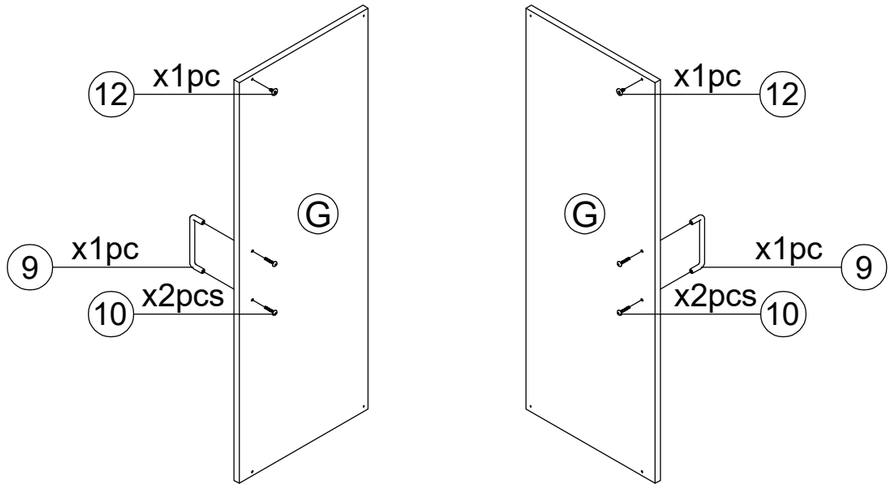

STEP 8

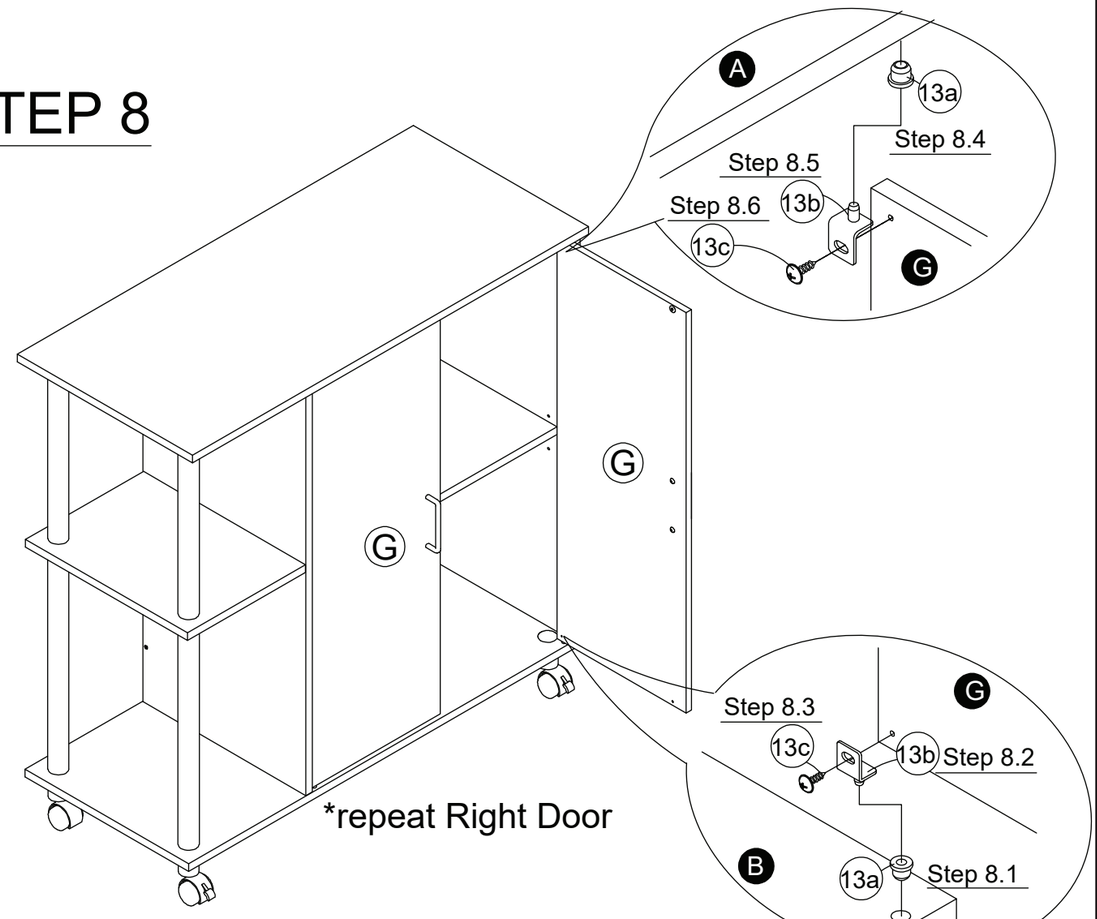

STEP 5

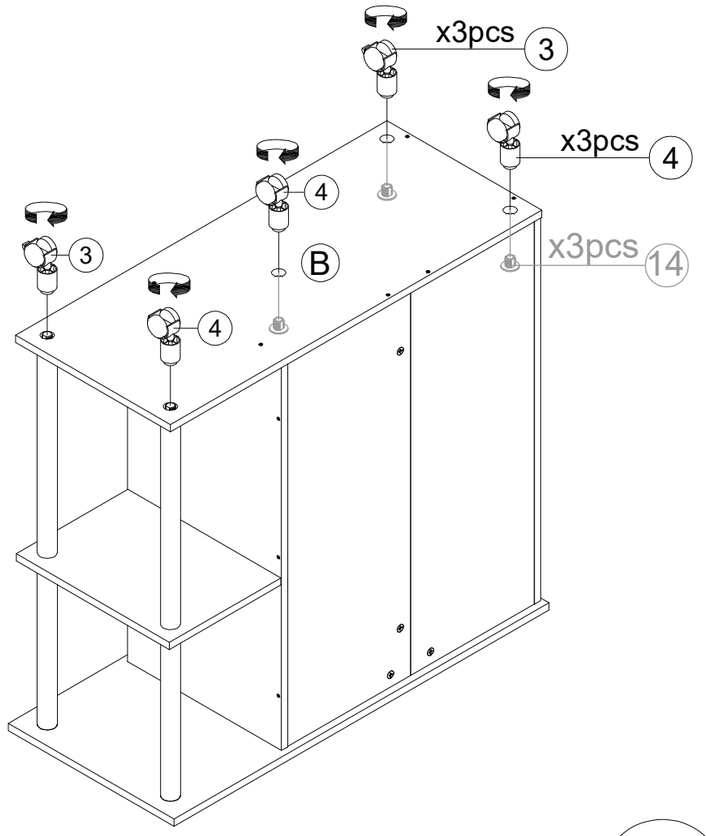

STEP 6

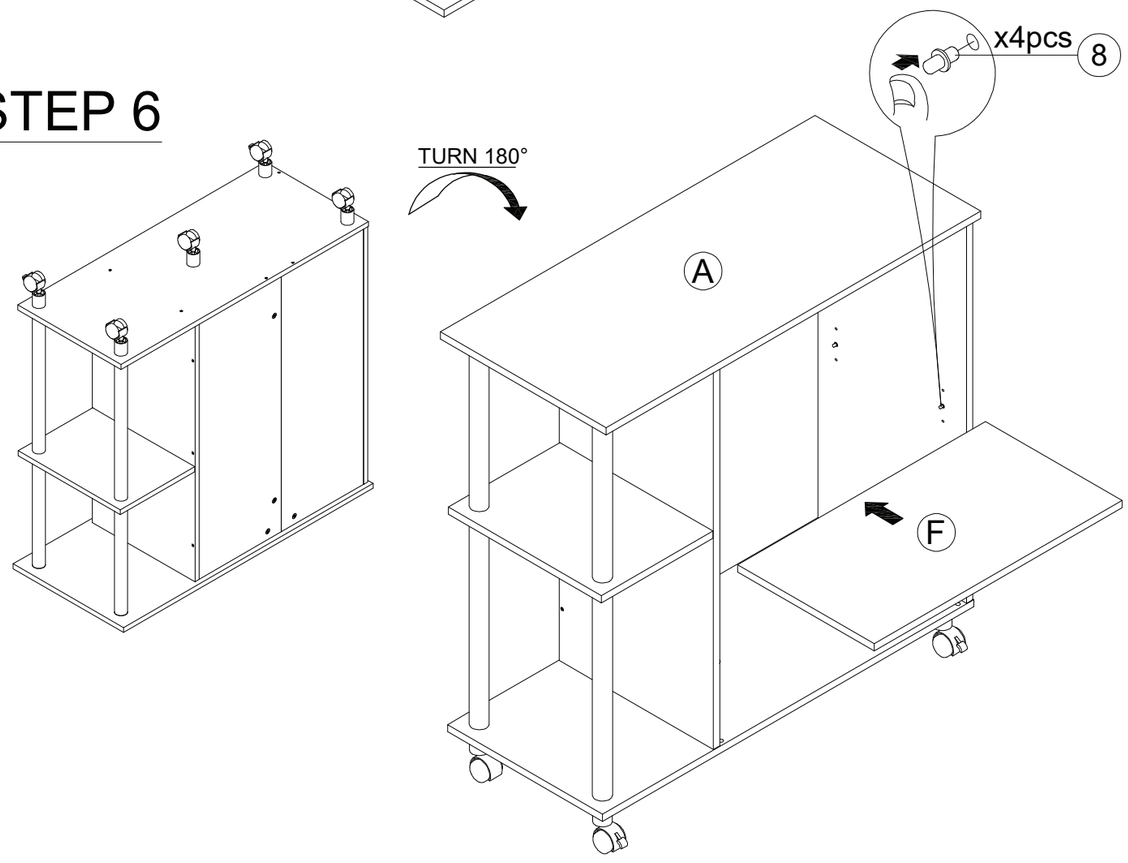

ASSEMBLY INSTRUCTIONS

BEFORE YOU BEGIN, PLEASE READ ASSEMBLY INSTRUCTIONS CAREFULLY, FOLLOW THEM STEP BY STEP.

STEP 1

Step 1.1

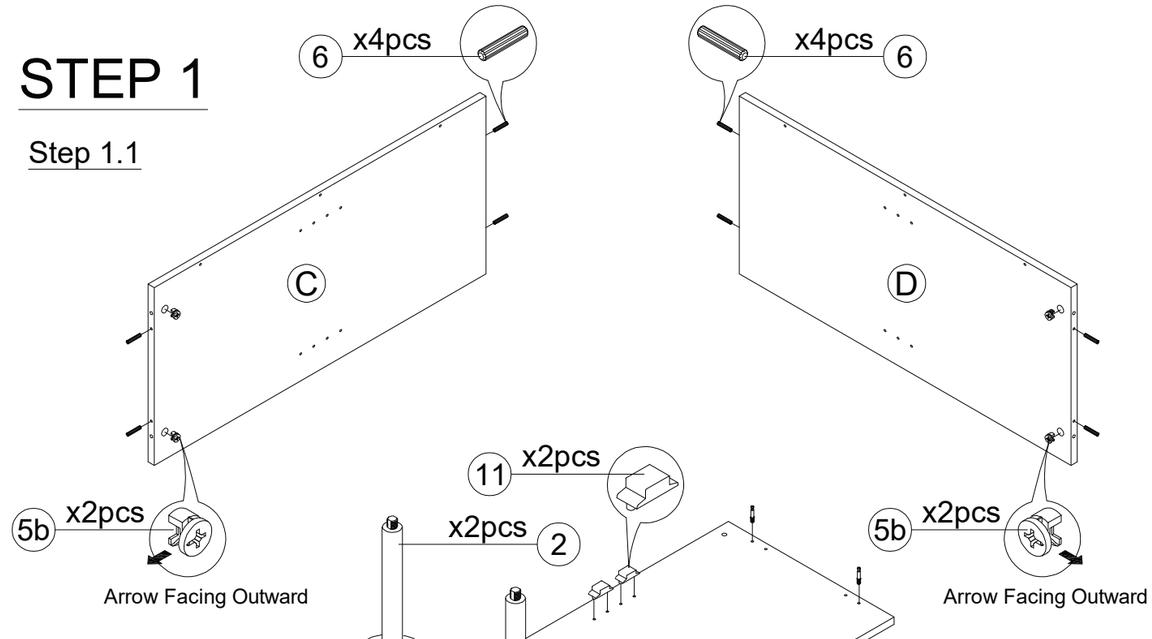

Step 1.2



Step 1.3

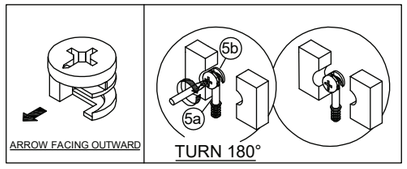

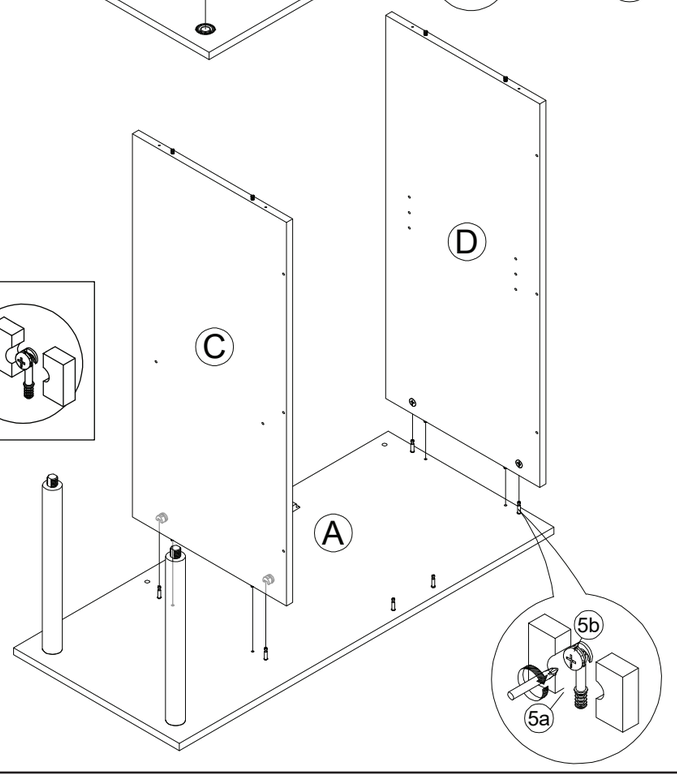

STEP 2

Step 2.1

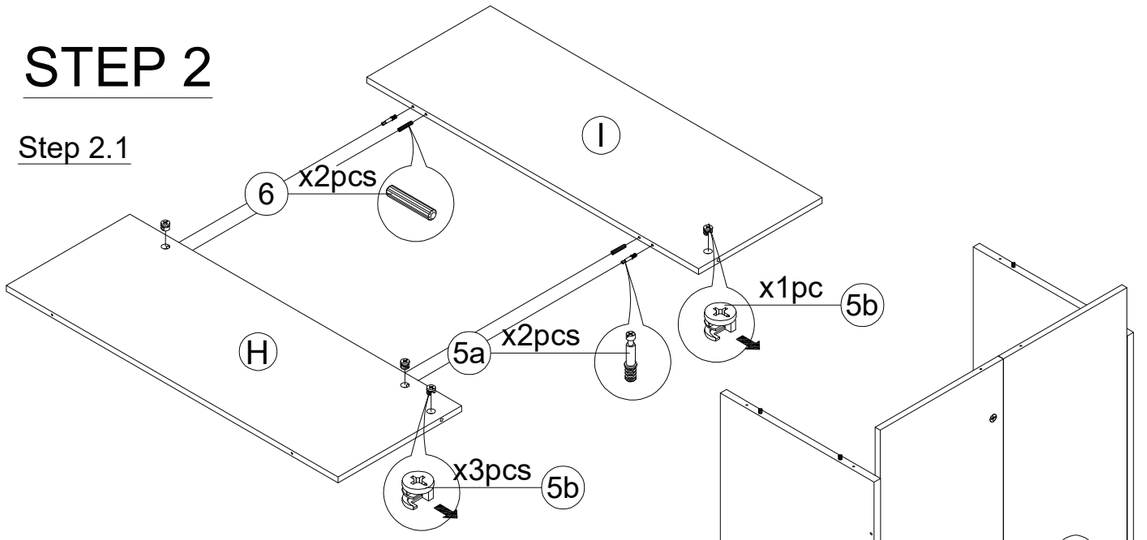

Step 2.2

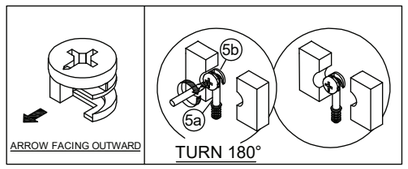

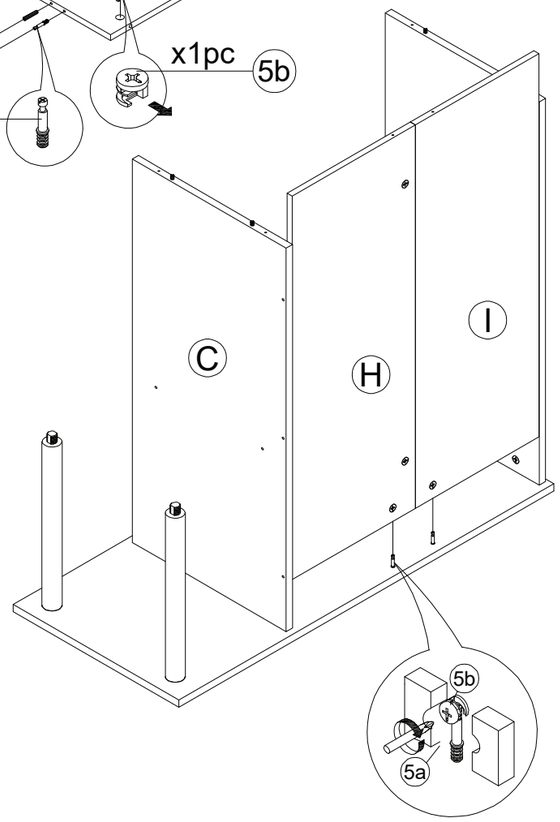

Step 2.3

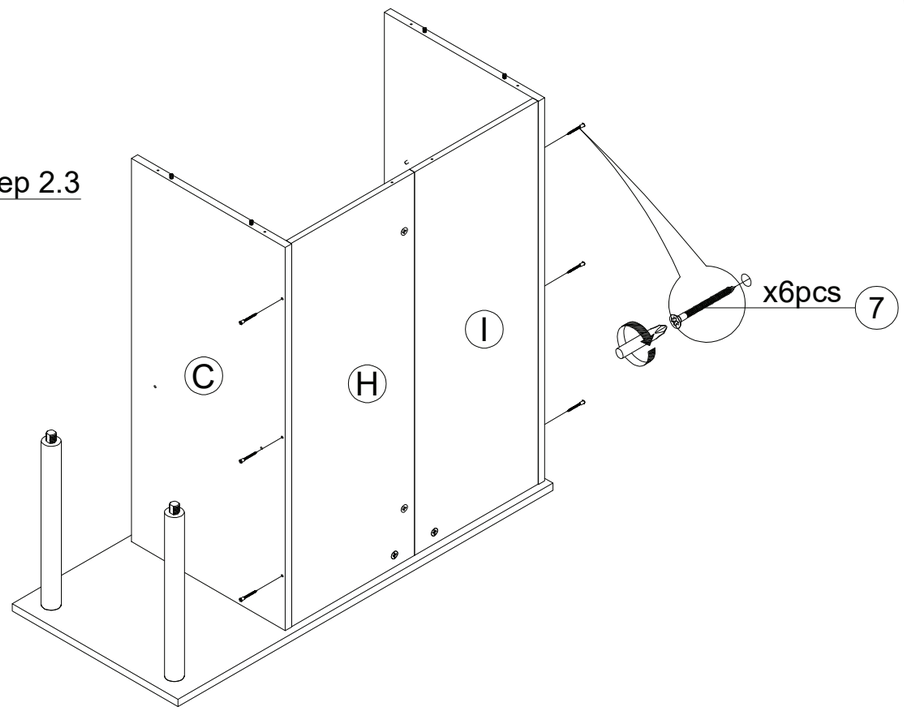

STEP 3

Step 3.1

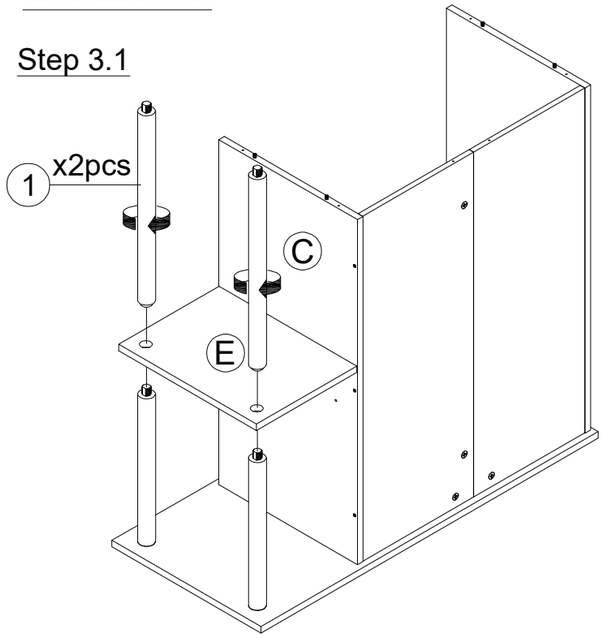

Step 3.2

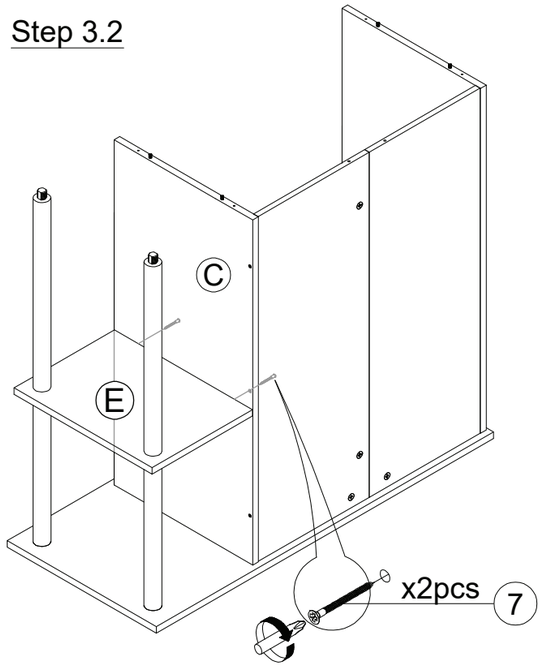

STEP 4

