STEP 6

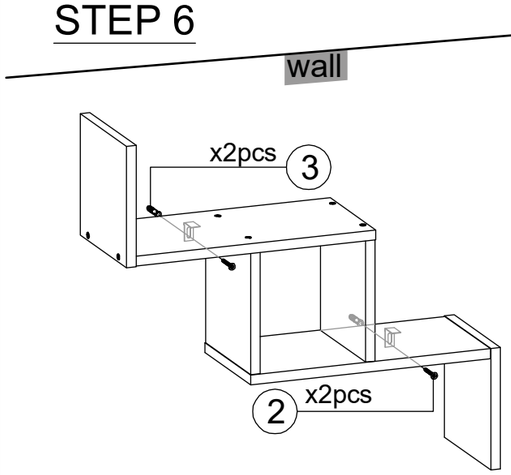

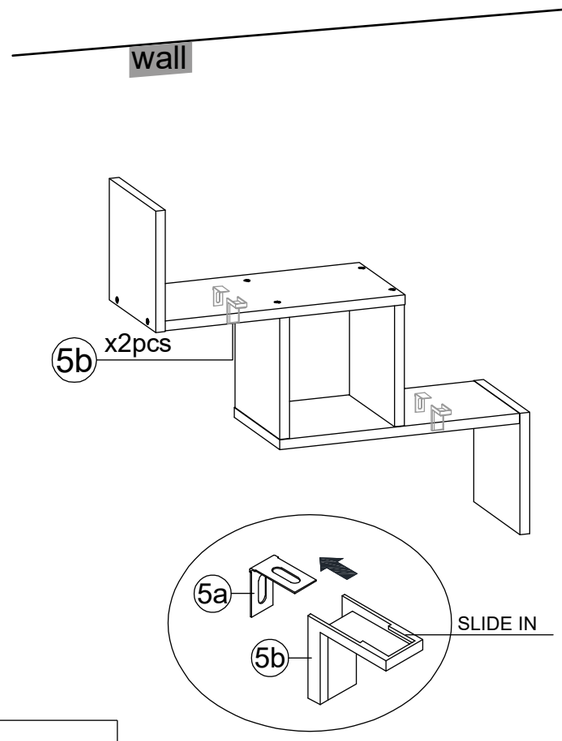

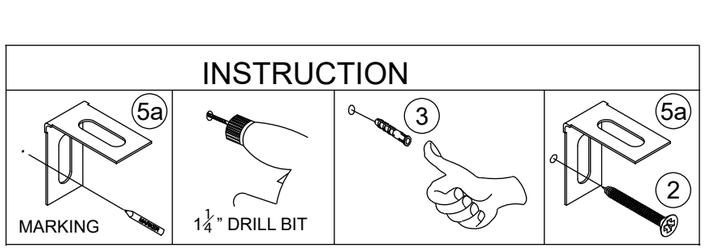

Recommended Maximum Weight

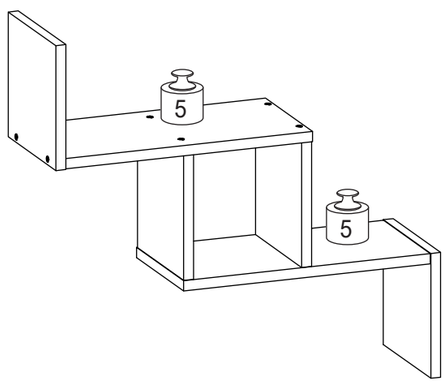

*Unit in Pound(lbs.)

WARNING:

>This unit has been designed to support the maximum loads shown. Exceeding these load limits could cause sagging, instability, product collapse, and/or serious injury.

>DO NOT allow children to climb on unit.

> Put heavier items on lower shelves.

Furinno

Fits Space, Fits Budget

00:20

Approx. 20 minutes

Recomm. 1 Person

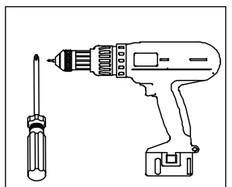

Tools Required

Assembly Instruction

Furinno Wall Mounted Shelves

MODEL : **22099**

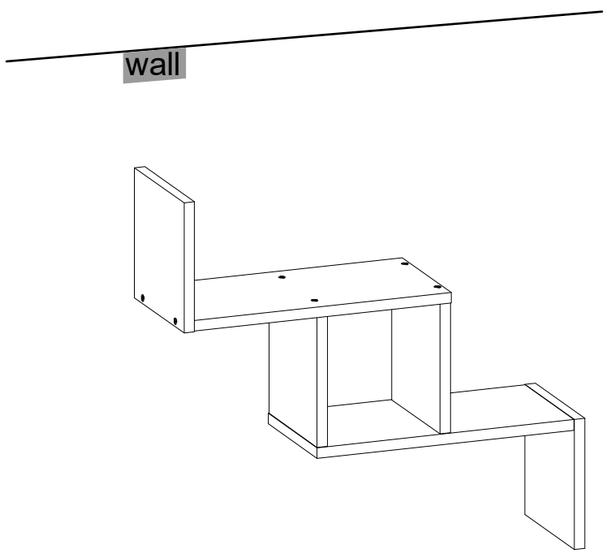

Customer Support

NEED HELP? For replacement requests or product inquiries, please contact our Customer Service Team by emailing us at **support@furinno.com**. Thank you for selecting Furinno!

www.furinno.com

2209920220825

HARDWARE & PARTS LIST

NO	HARDWARE LIST	QTY
1	POZIHEAD SCREW	12pcs
2	C/B SCREW	2pcs
3	WALL PLUG	2pcs
4	PWA SCREW	2pcs
5	CORNER CODE 5a 5b	2pcs

NO	PARTS LIST	QTY
A	SHELF PANEL	2pcs
B	SIDE PANEL	2pcs
C	CENTER PANEL	2pcs

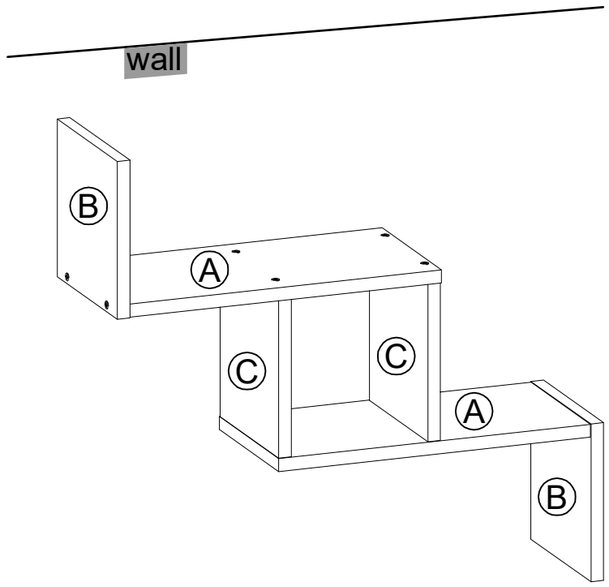

** ROTATE MODEL FOLLOW BY
THE OPTION AND OWN STYLE

USEFUL HINTS BEFORE YOU START:

1. Read each step carefully before starting.
2. It is important that each step is performed in correct order to avoid difficulties.
3. Identify, sort and count the parts before assembly.
4. Assemble your furniture on packaging cardboard to prevent scratch or damage.
5. Clean the product with mild cleanser using soft damped cloth. Do not use harsh or abrasive cleanser.
6. Using uncompatible hardware might cause damage to product.

ASSEMBLY INSTRUCTIONS

BEFORE YOU BEGIN, PLEASE READ ASSEMBLY INSTRUCTIONS CAREFULLY, FOLLOW THEM STEP BY STEP.

ROTATE MODEL FOLLOW BY THE OPTION AND OWN STYLE

STEP 1

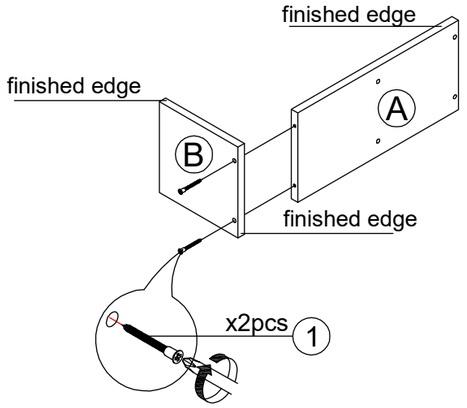

STEP 2

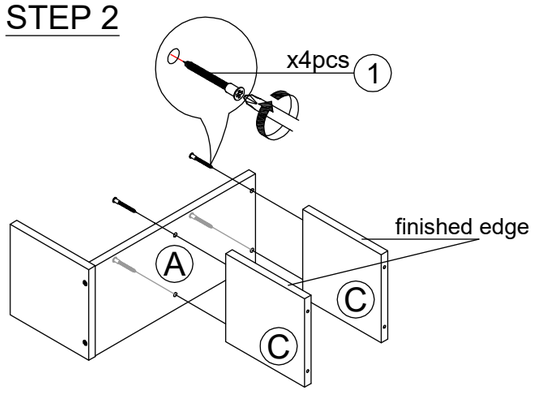

STEP 3

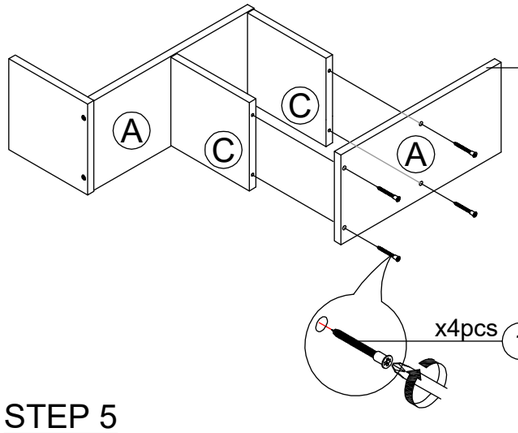

STEP 4

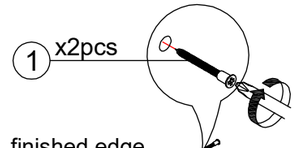

STEP 5

Step 5.1

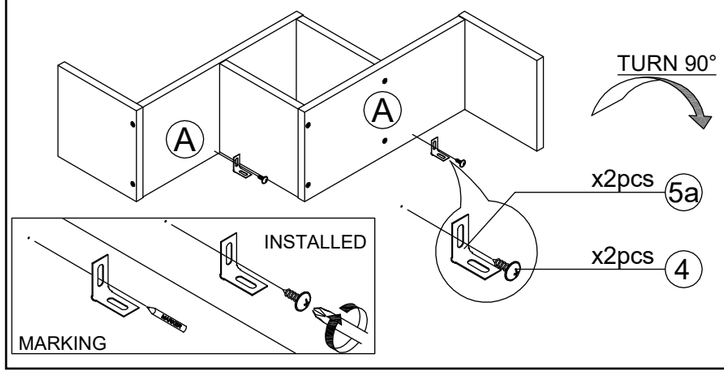

Step 5.2

