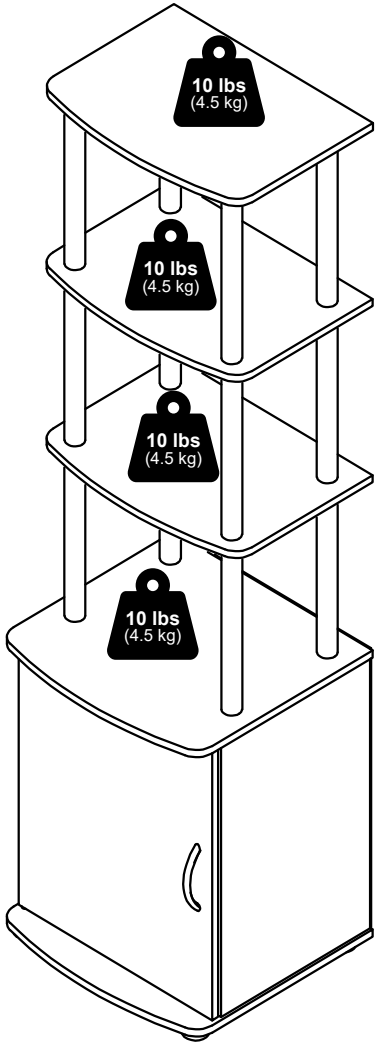

Furinno®

Fits Space, Fits Budget



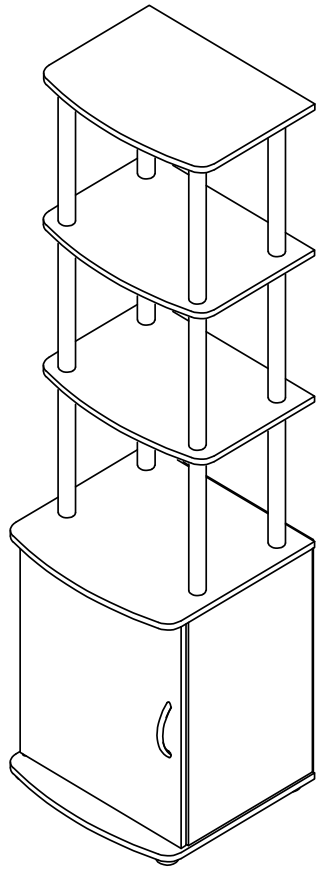

MODEL: 22113

support@furinno.com

www.furinno.com

2211320230525

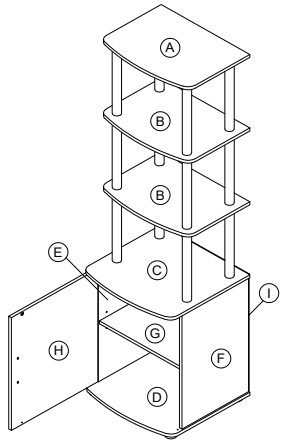

1 x 4 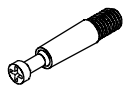 M6 x 31mm	**2** x 4  15mm	**3** x 4  M4 x 40mm	**4** x 8 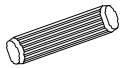 M6 x 20mm
5 x 12 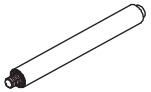 Ø30 x 280mm	**6** x 4 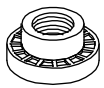	**7** x 4  34 x 2mm	**8** x 4  Ø40 x 14mm
9 x 2  6mm	**10** x 1  131 x 26mm	**11** x 2 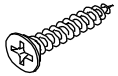 M4 x 20mm	**12** x 1 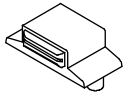
13 x 1  M5 x 6mm	**14** x 4  5 x 6 x 16mm	**15** x 16 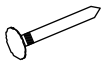 2.5 x 18mm	**16** x 1 

17 x 1

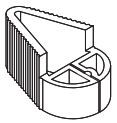

8

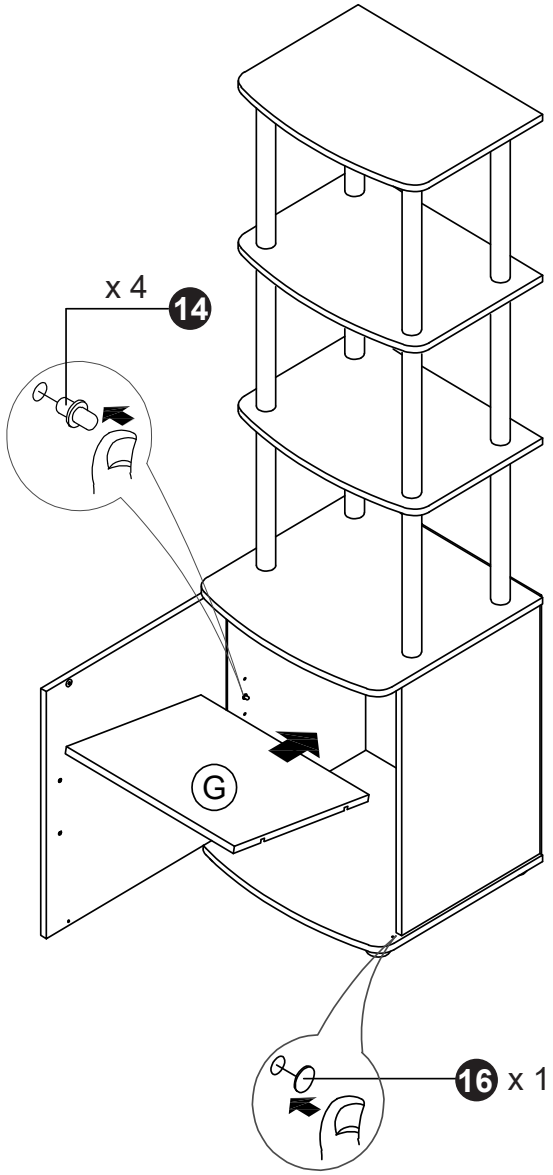

7

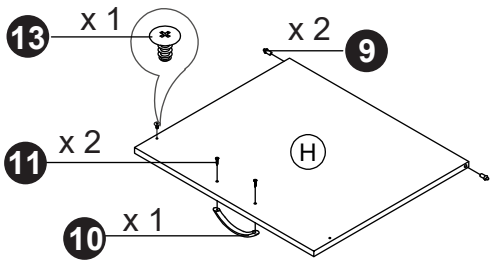

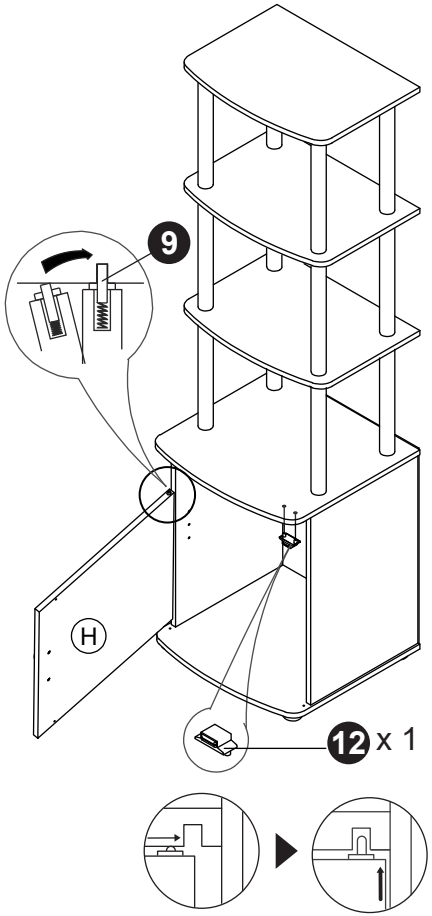

1

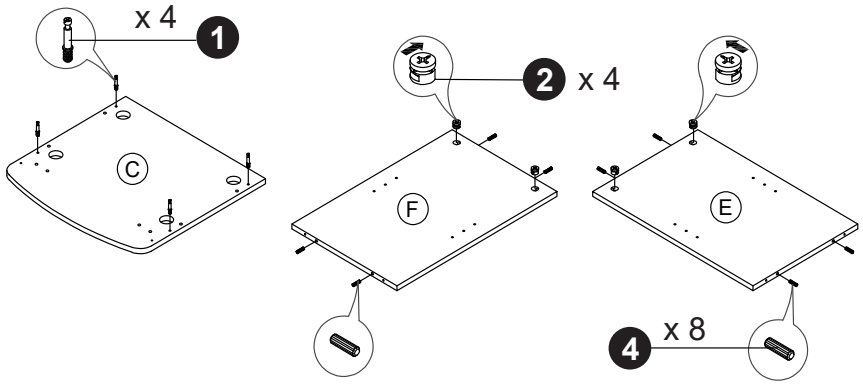

2

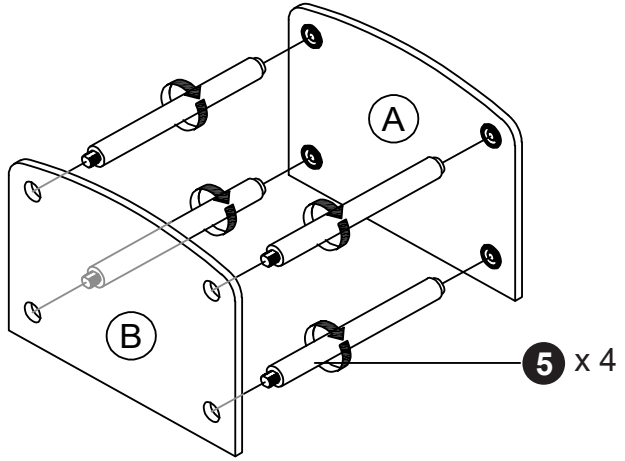

3

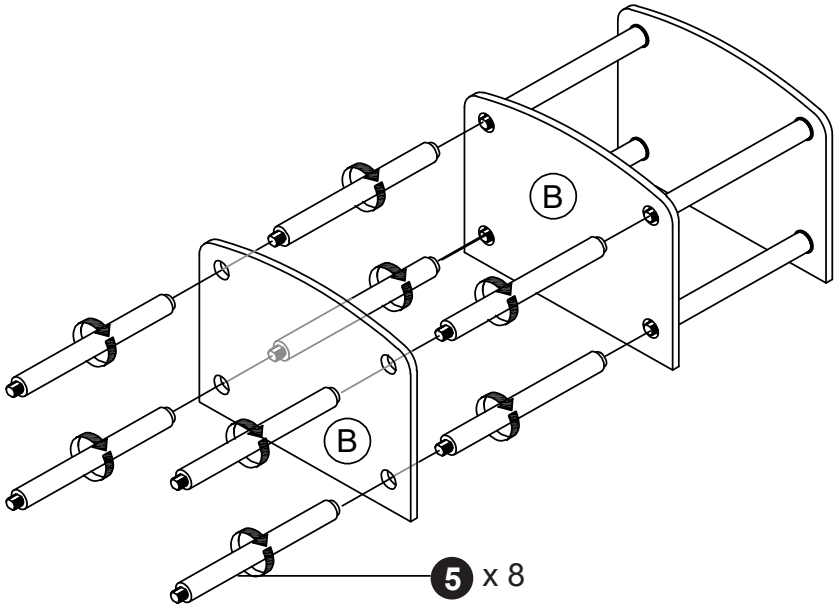

4

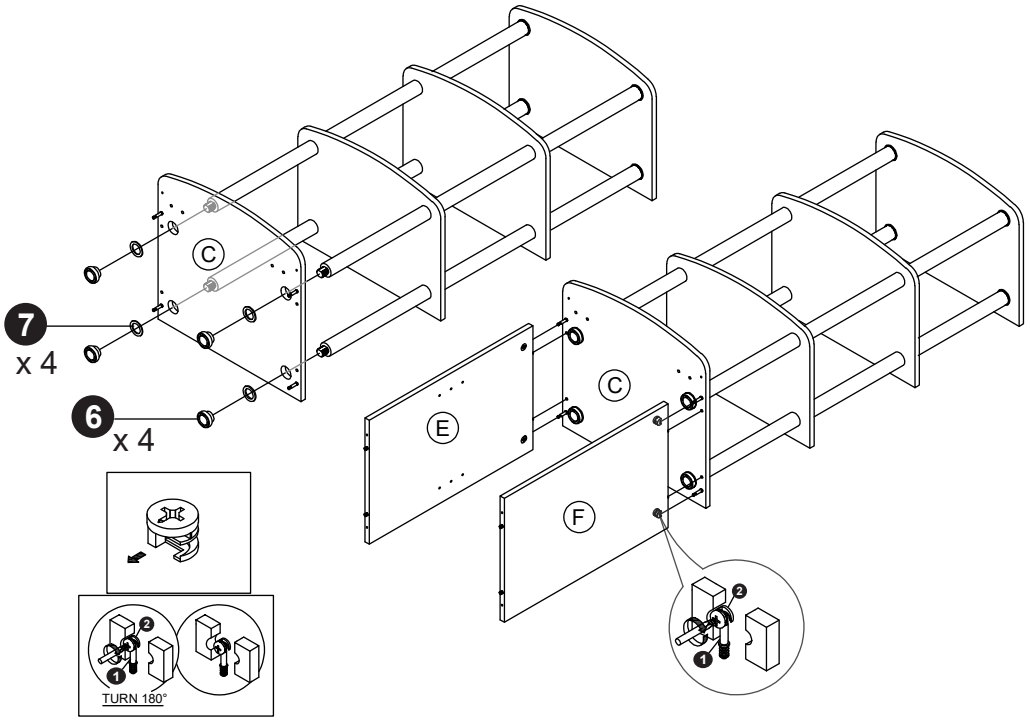

5

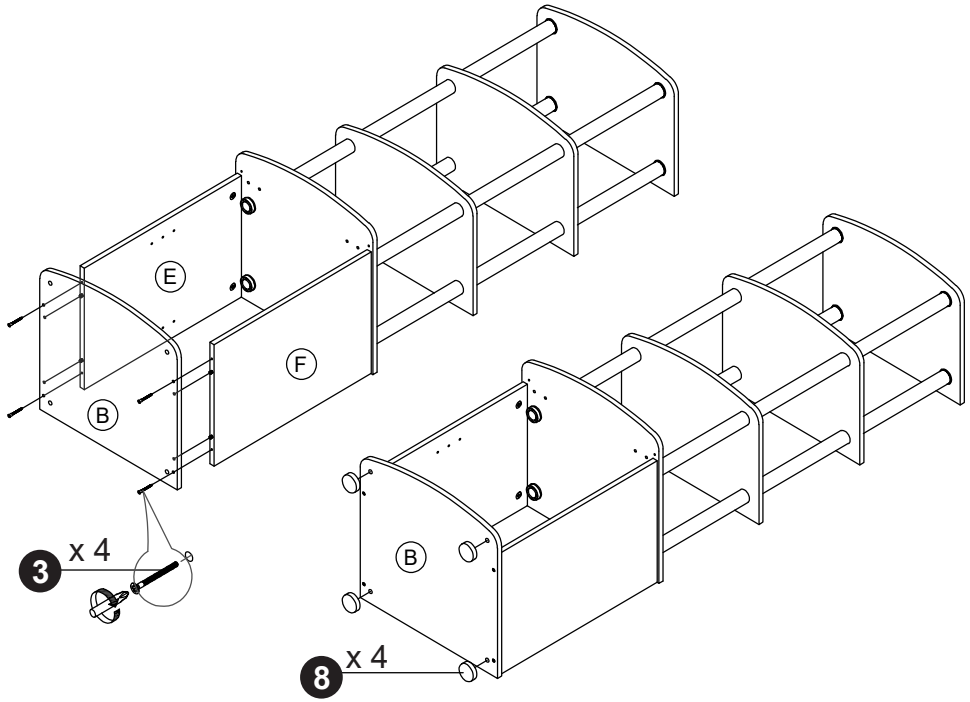

6

