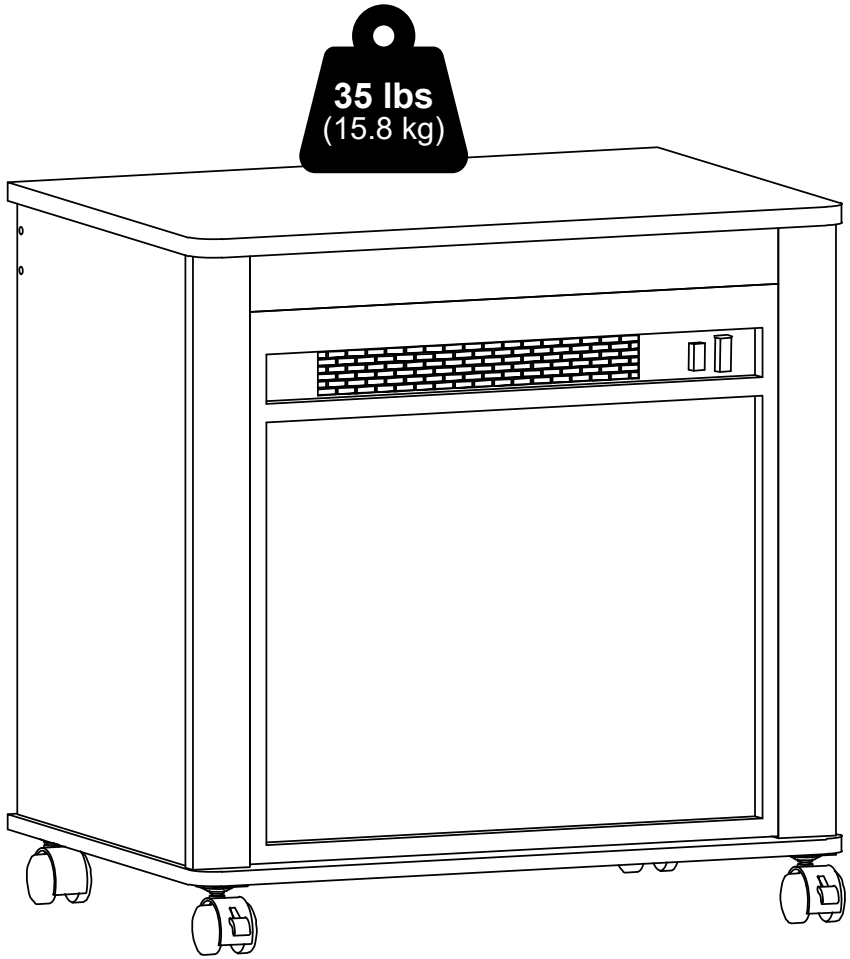

Furinno®

Fits Space, Fits Budget





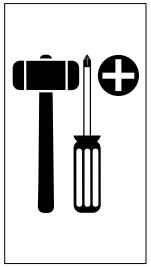

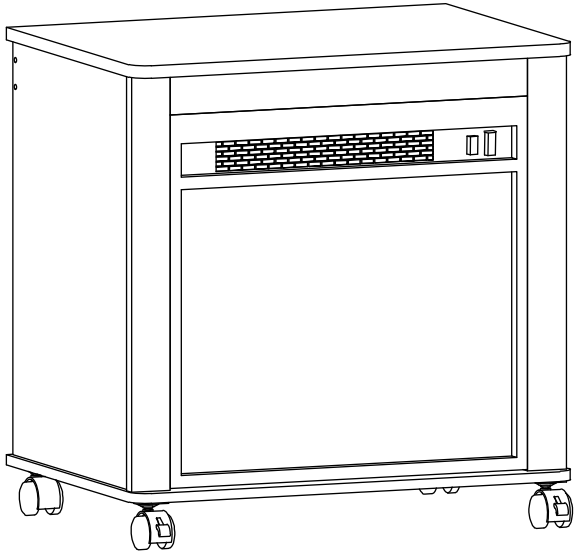

MODEL: 22124

support@furinno.com

www.furinno.com

2212420240105

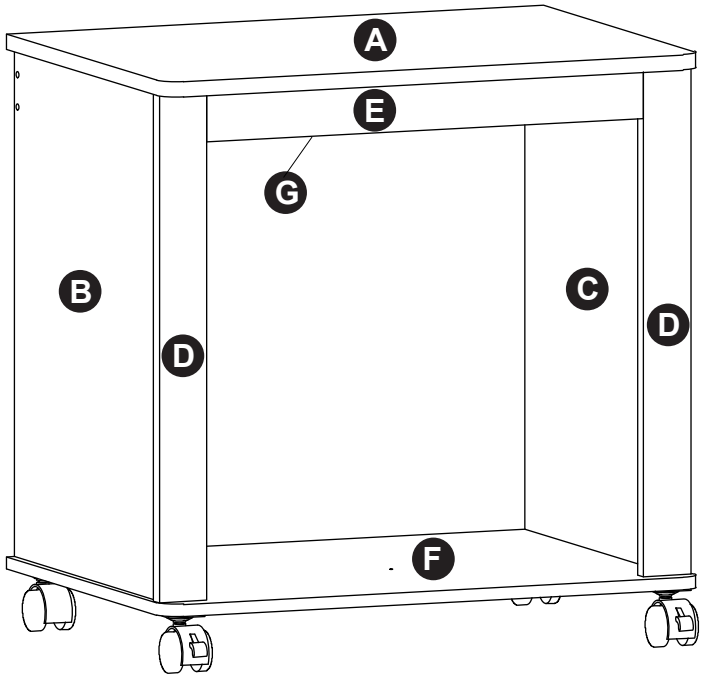

1 x 8 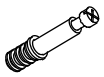 M6 x 31mm	2 x 8  15mm	3 x 8 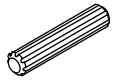 M6 x 20mm	4 x 8  M5 x 40mm
5 x 2  17 x 22mm	6 x 11  M4 x 11mm	7 x 1  1.2 x 24 x 90mm	8 x 16  M4 x 14mm
9 x 2 	10 x 2 	11 x 1 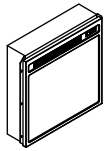	

8

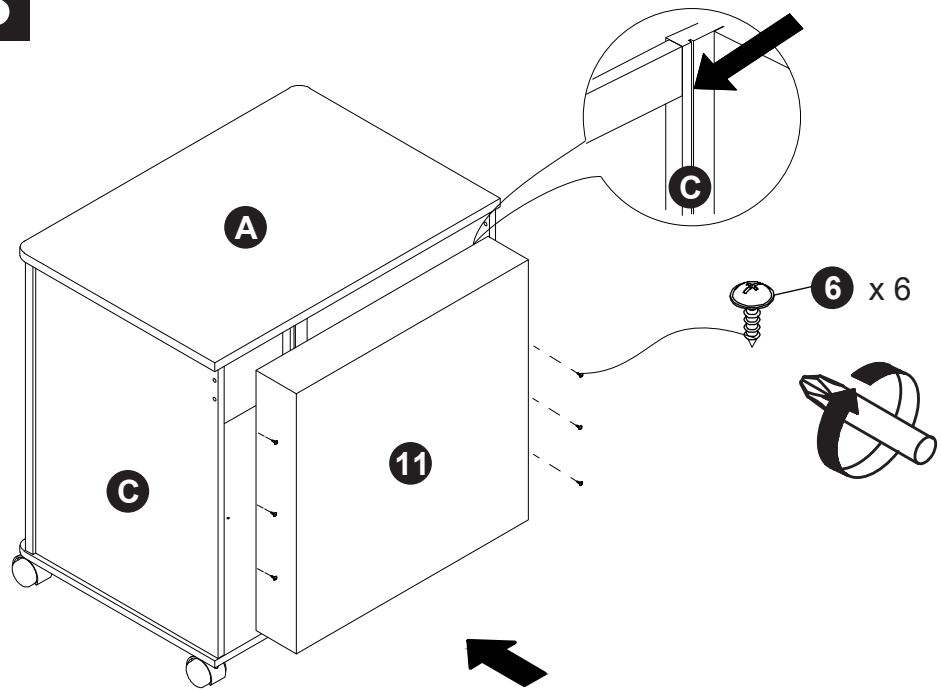

9

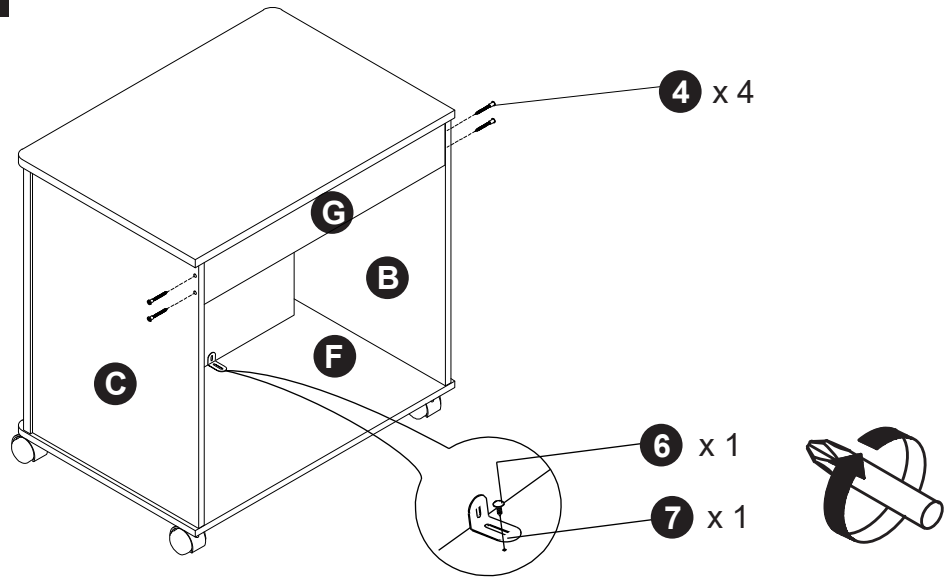

7

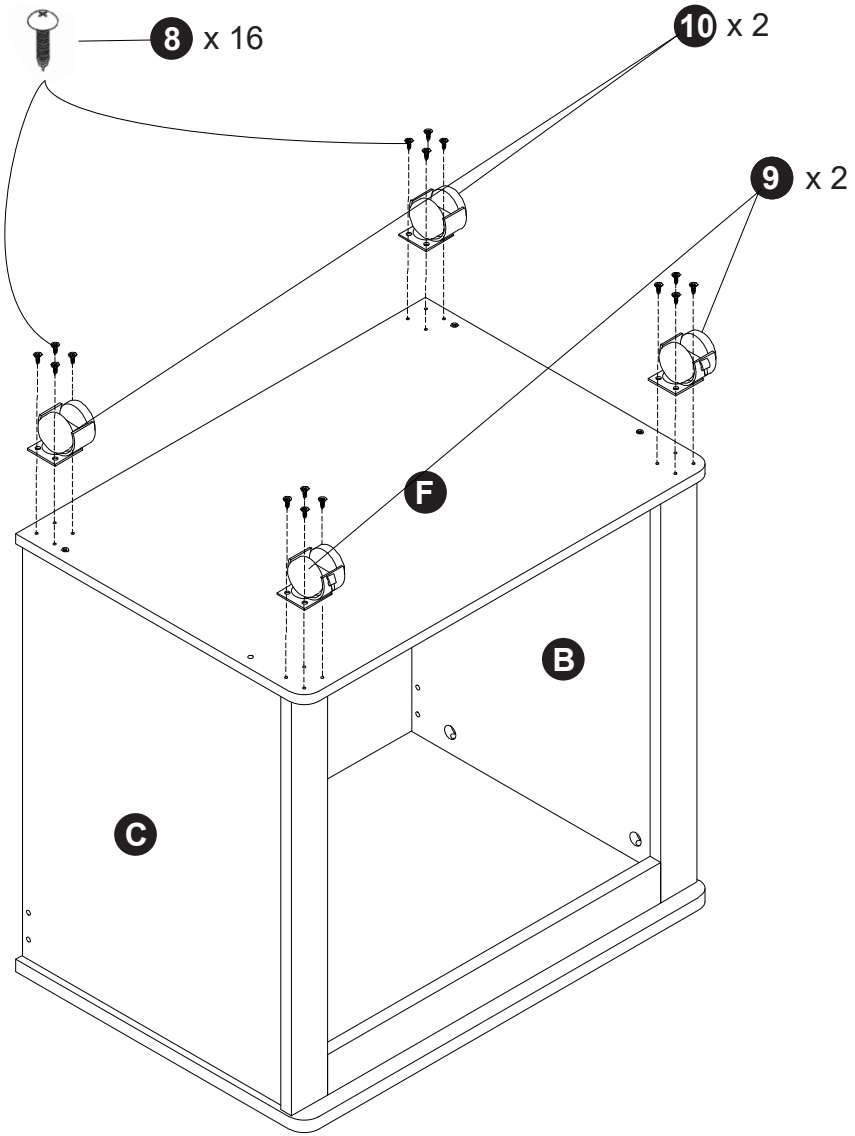

1

1.1

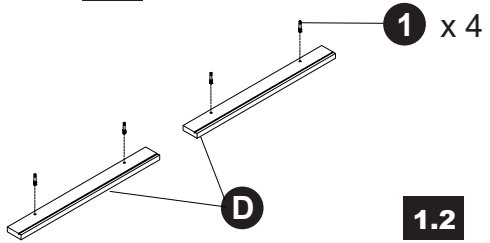

1.2

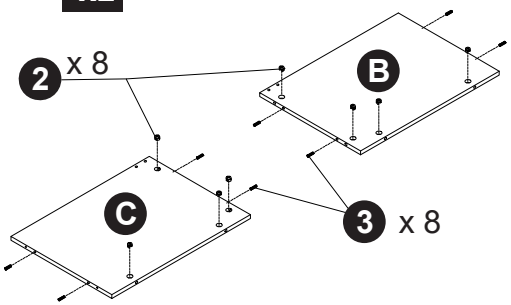

2

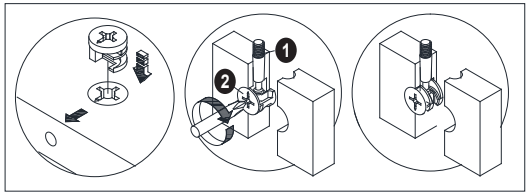

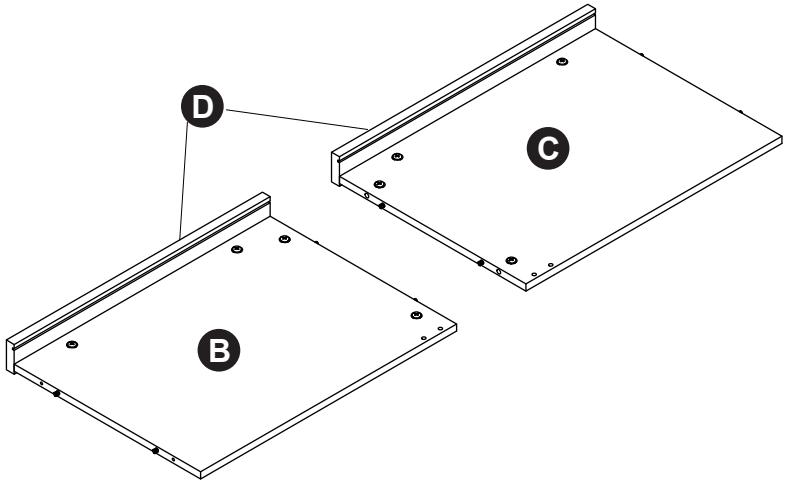

3

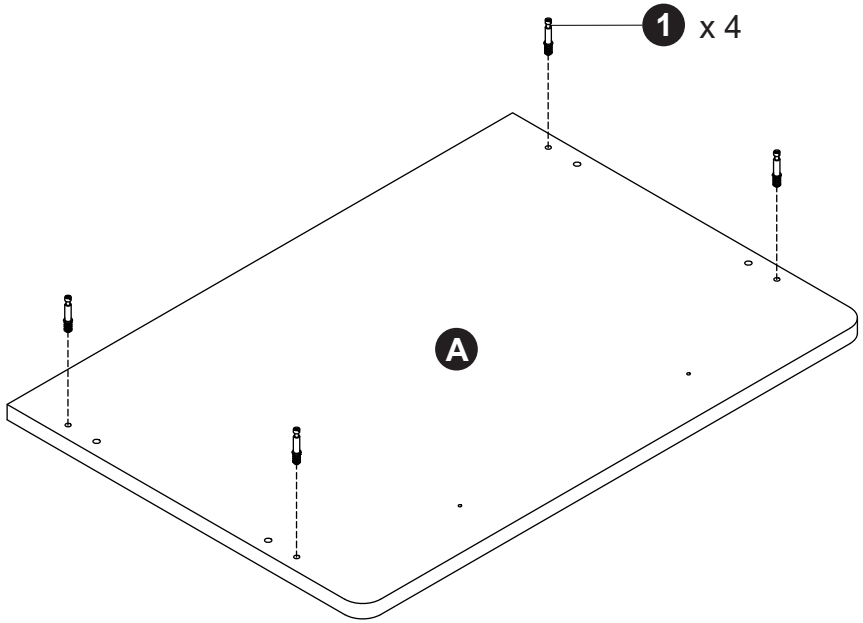

4

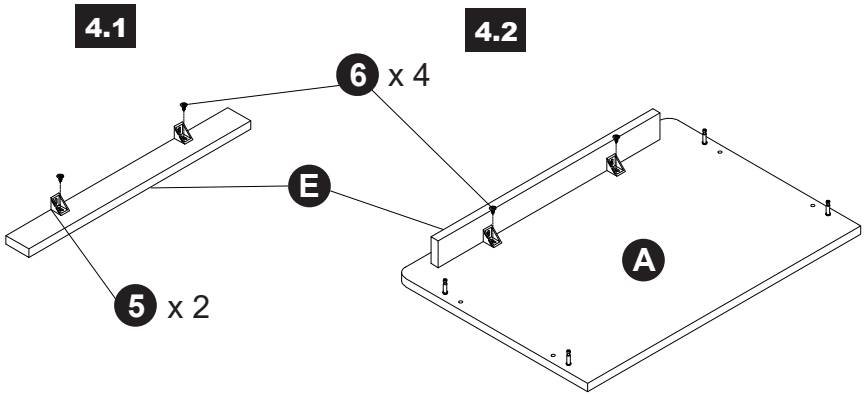

5

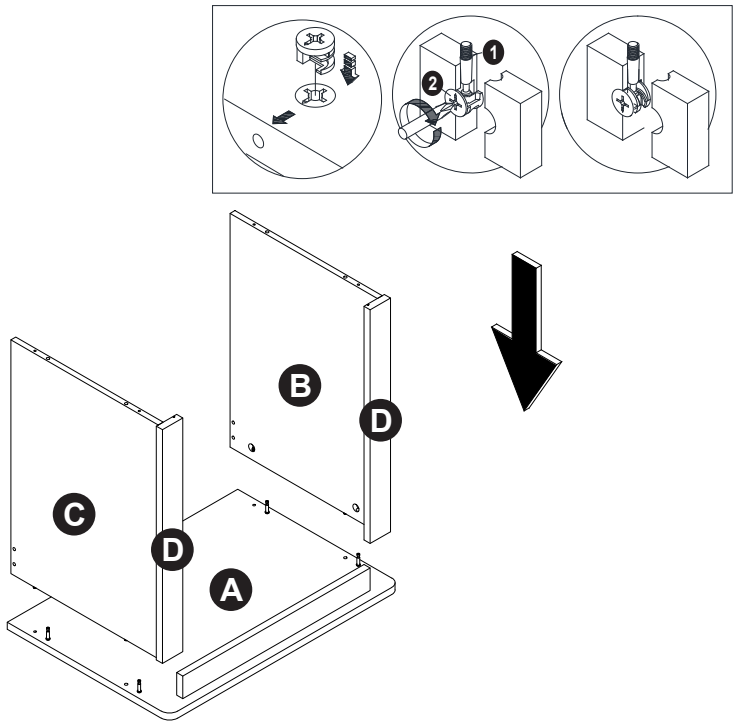

6

