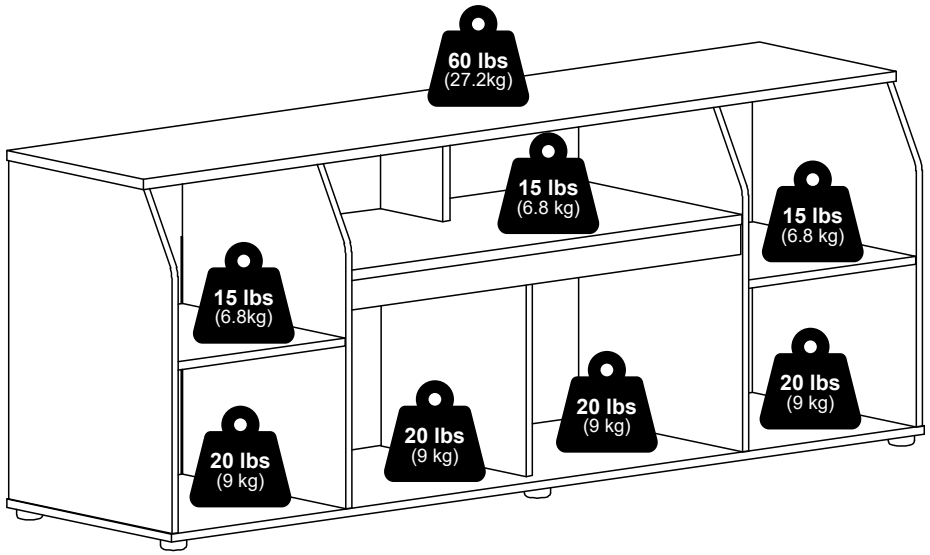

Furinno®

Fits Space, Fits Budget



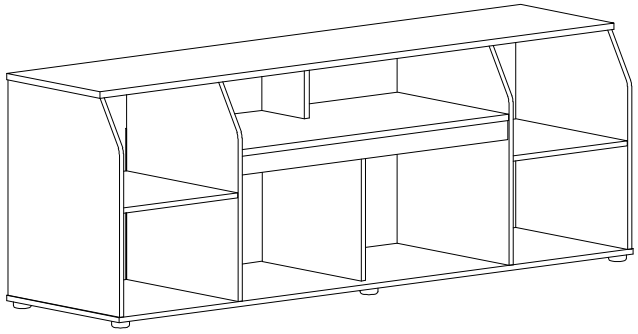

MODEL: 22174

support@furinno.com

www.furinno.com

2217420230526

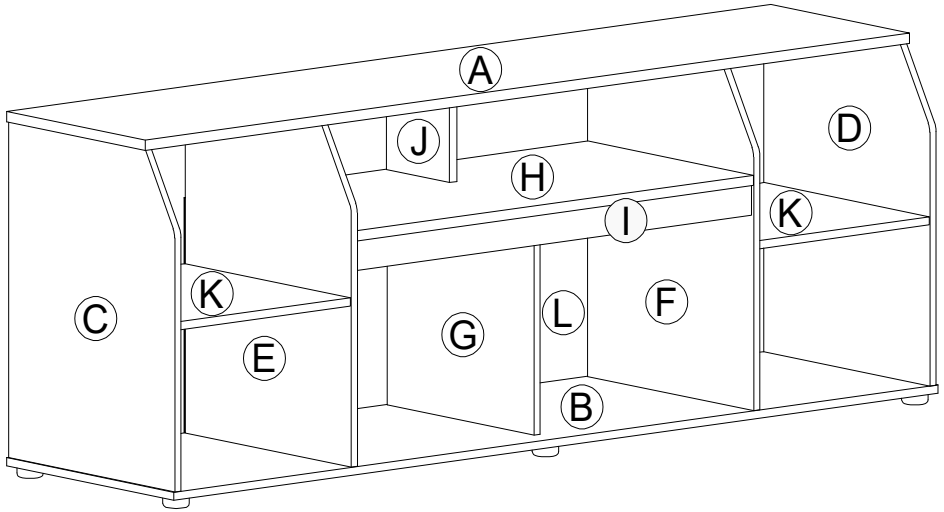

1 x 10 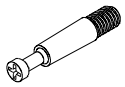 M6 x 31mm	2 x 10  15mm	3 x 24  M6 x 20mm	4 x 14  M5 x 40mm
5 x 24  2.5 x 18mm	6 x 3 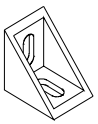 17 x 22mm	7 x 6  M4 x 11mm	8 x 8  5 x 6 x 16mm
9 x 8 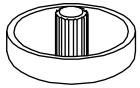	10 x 1 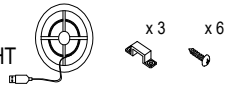	11 x 1 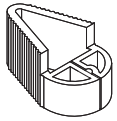	

9

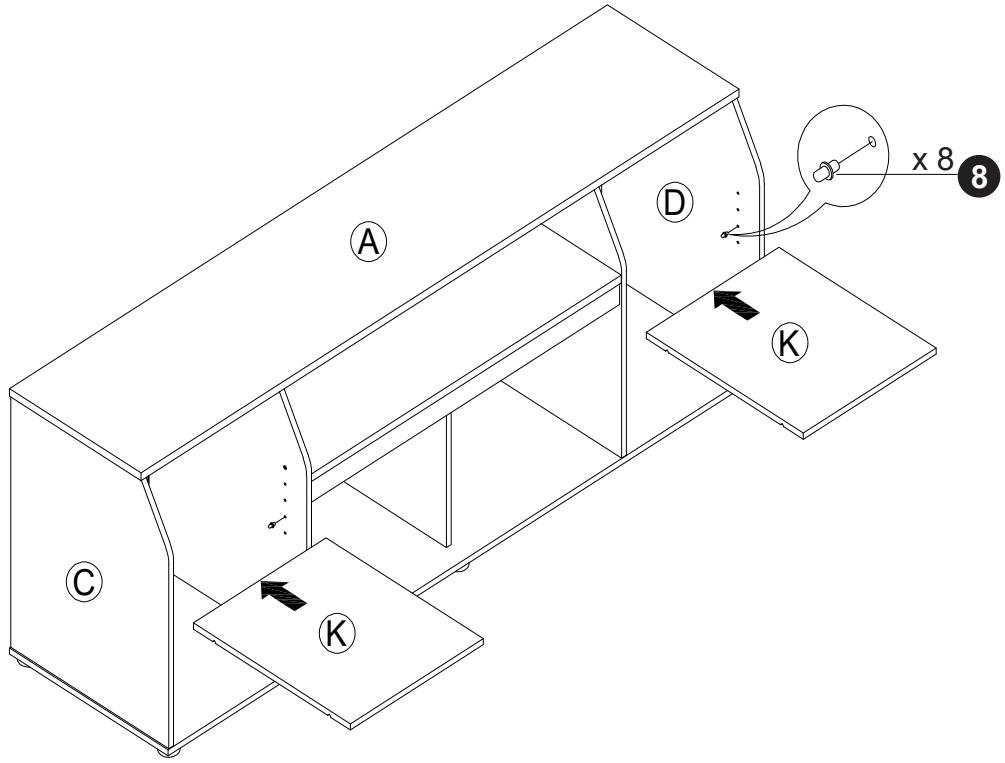

7

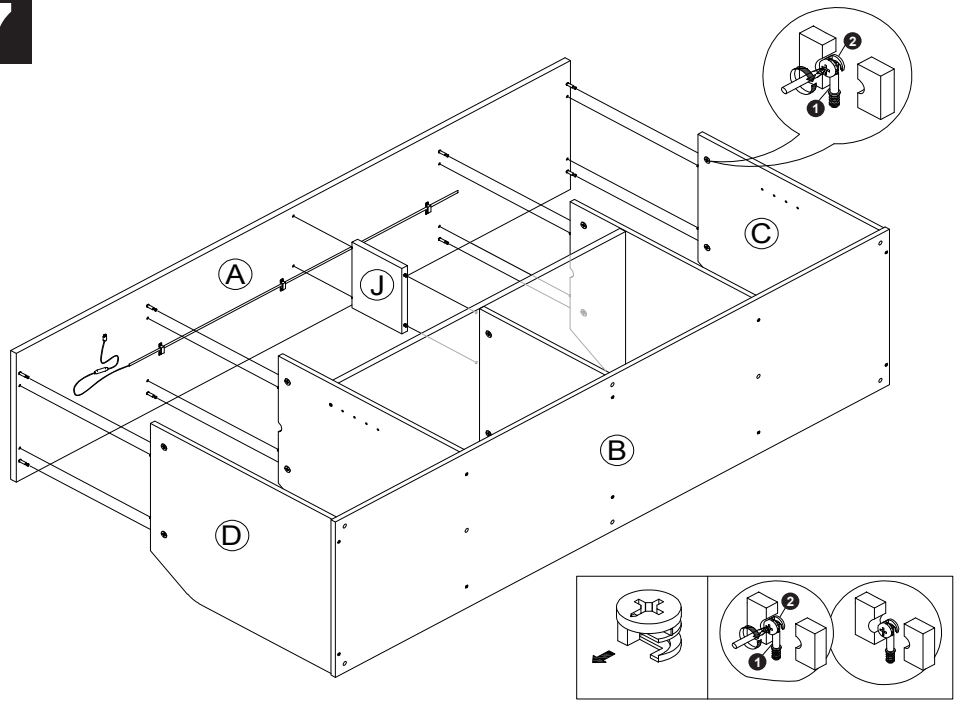
A
J
C
B
D
2
1

8

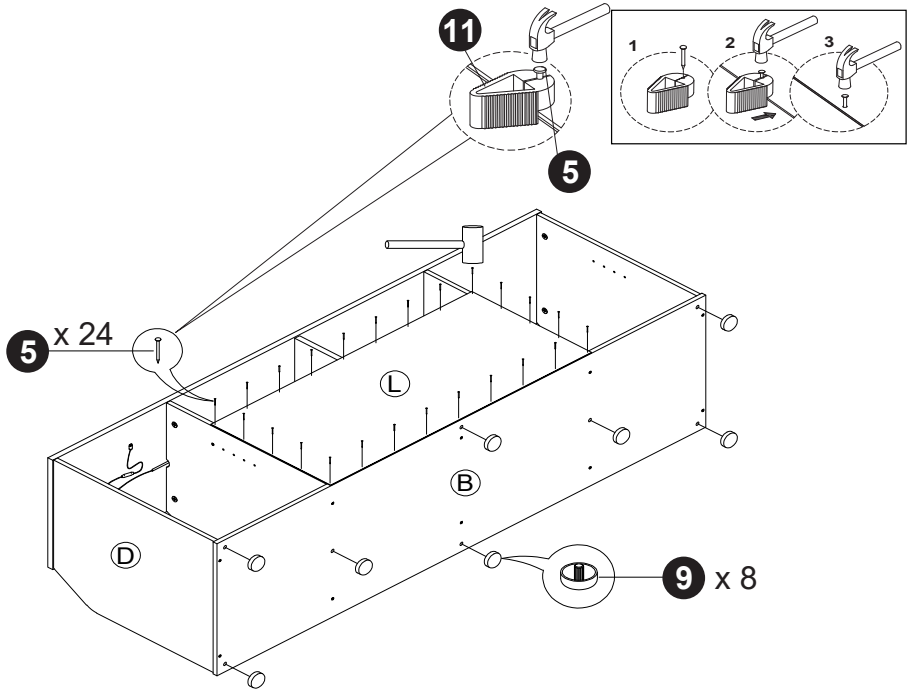
11
5
1
2
3
5 x 24
L
B
D
9 x 8

1

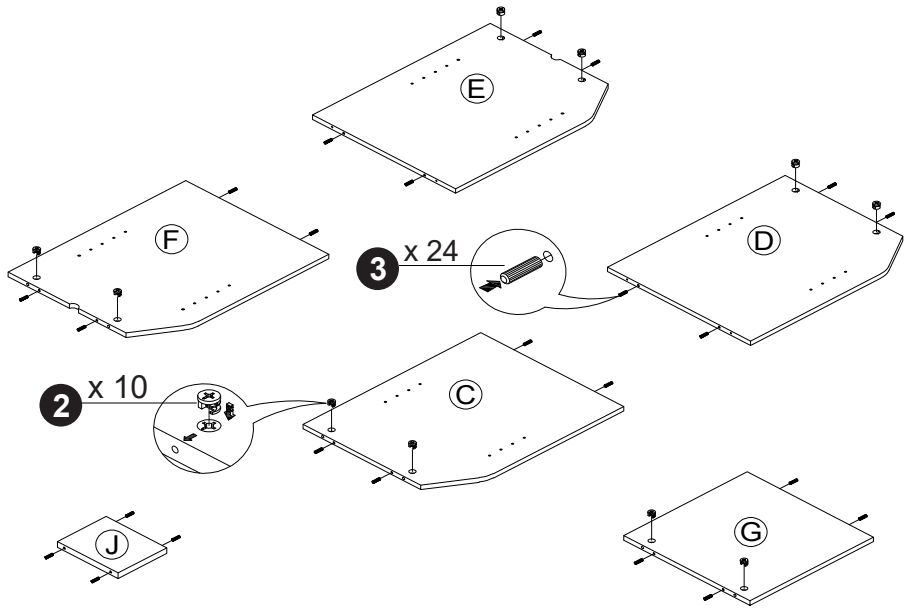
E
F
3 x 24
D
2 x 10
C
J
G

2

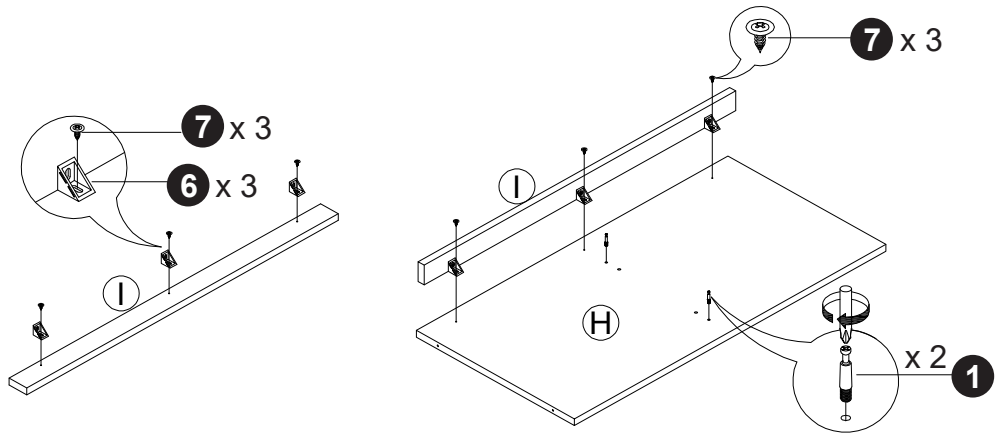
7 x 3
6 x 3
I
7 x 3
I
H
2 x 1

3

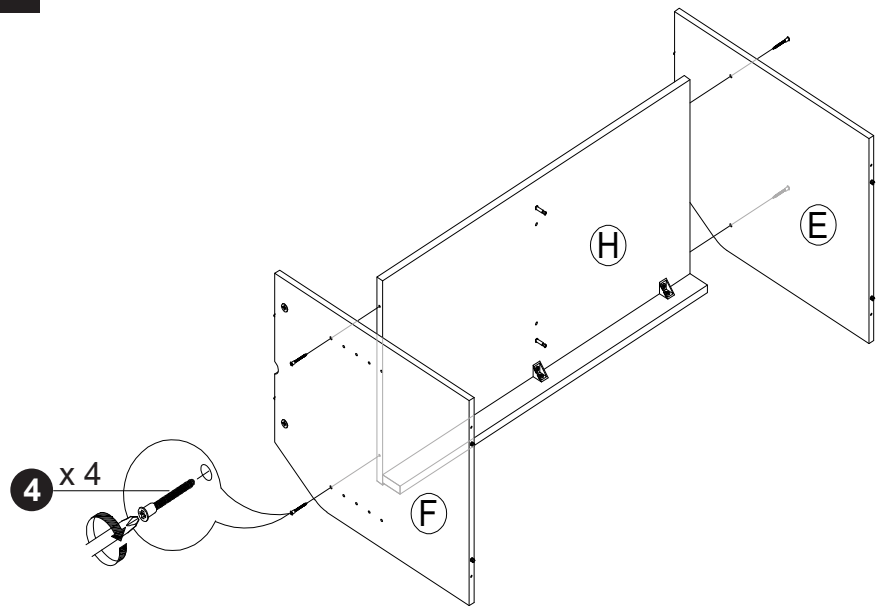

4

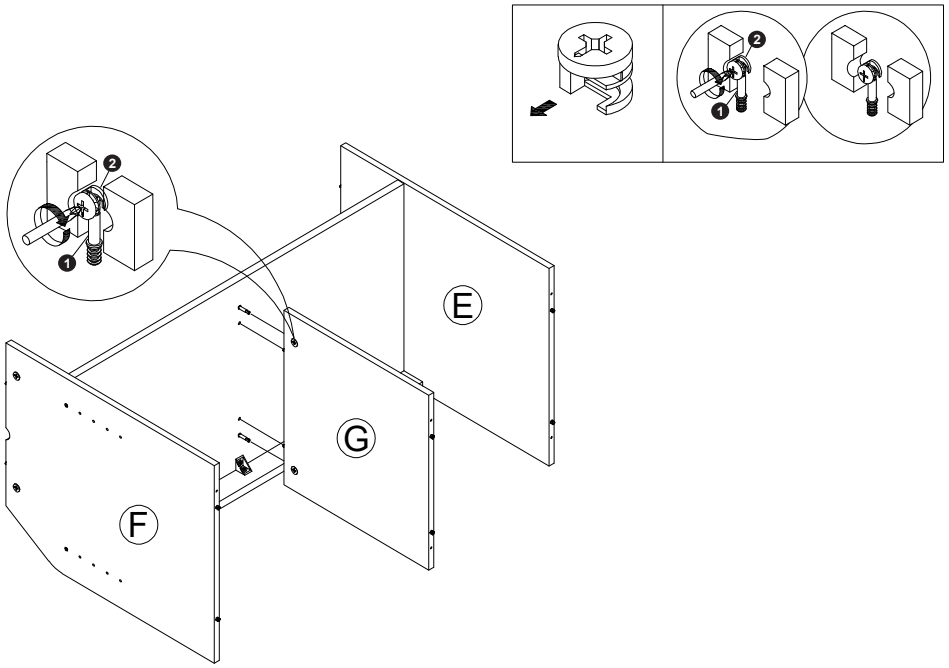

5

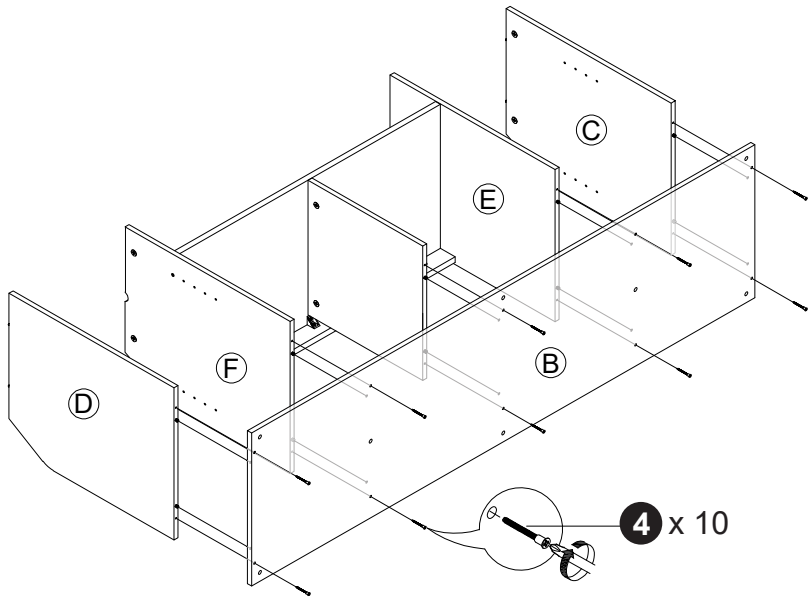

6

