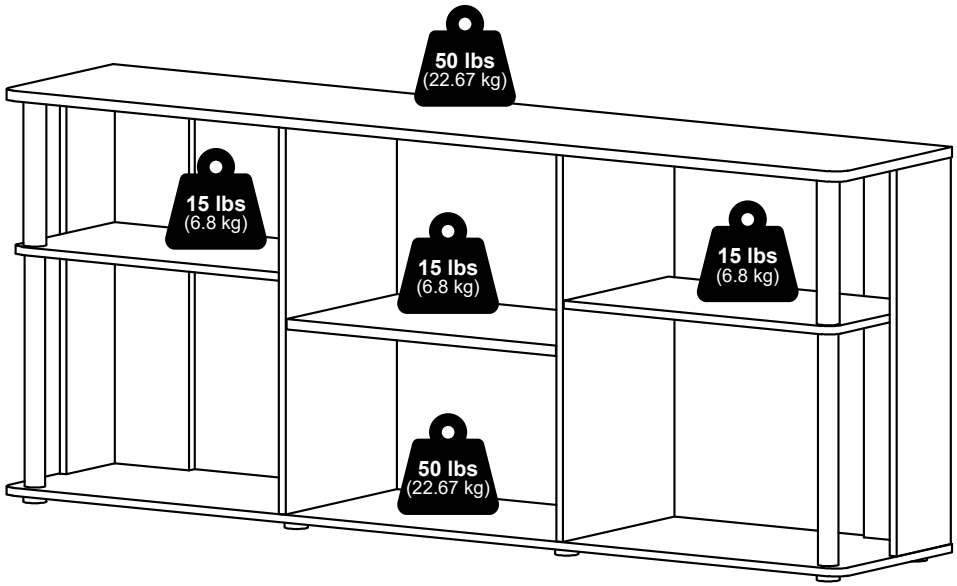

Furinno®

Fits Space, Fits Budget





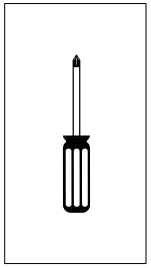

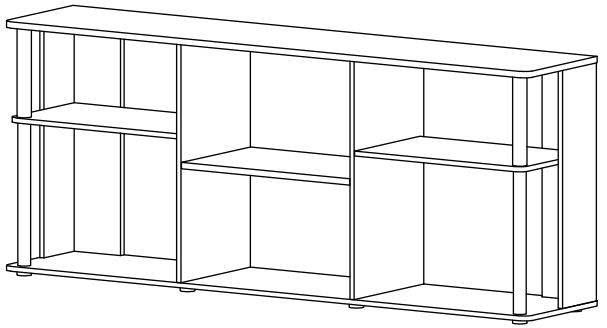

MODEL: 22175

support@furinno.com

www.furinno.com

2217520230817

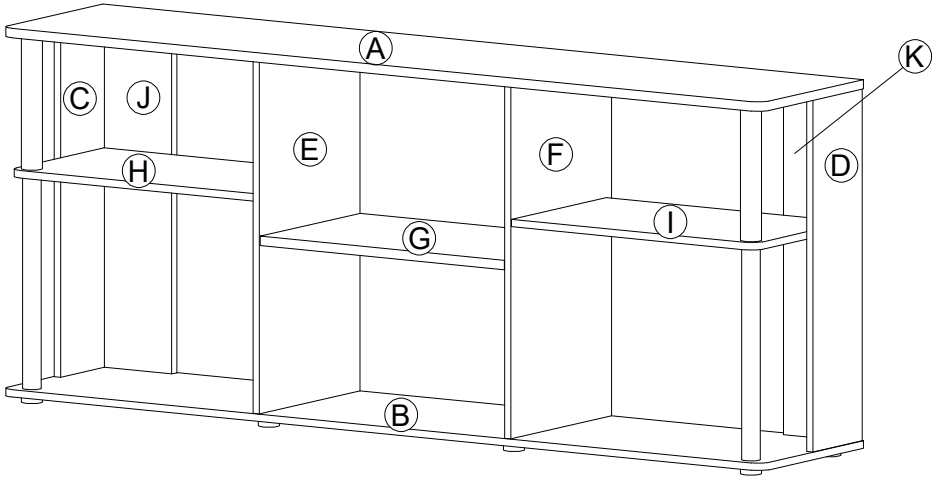

1 x 10 1a 1b 6 x 31mm 15mm	**2** x 20 M5 x 40mm	**3** x 2 Ø 30 x 340mm	**4** x 2 Ø 34 x 210mm
5 x 8 Ø34 x 8mm	**6** x 4 Ø34 x 2mm	**7** x 4 5 x 15mm	

8

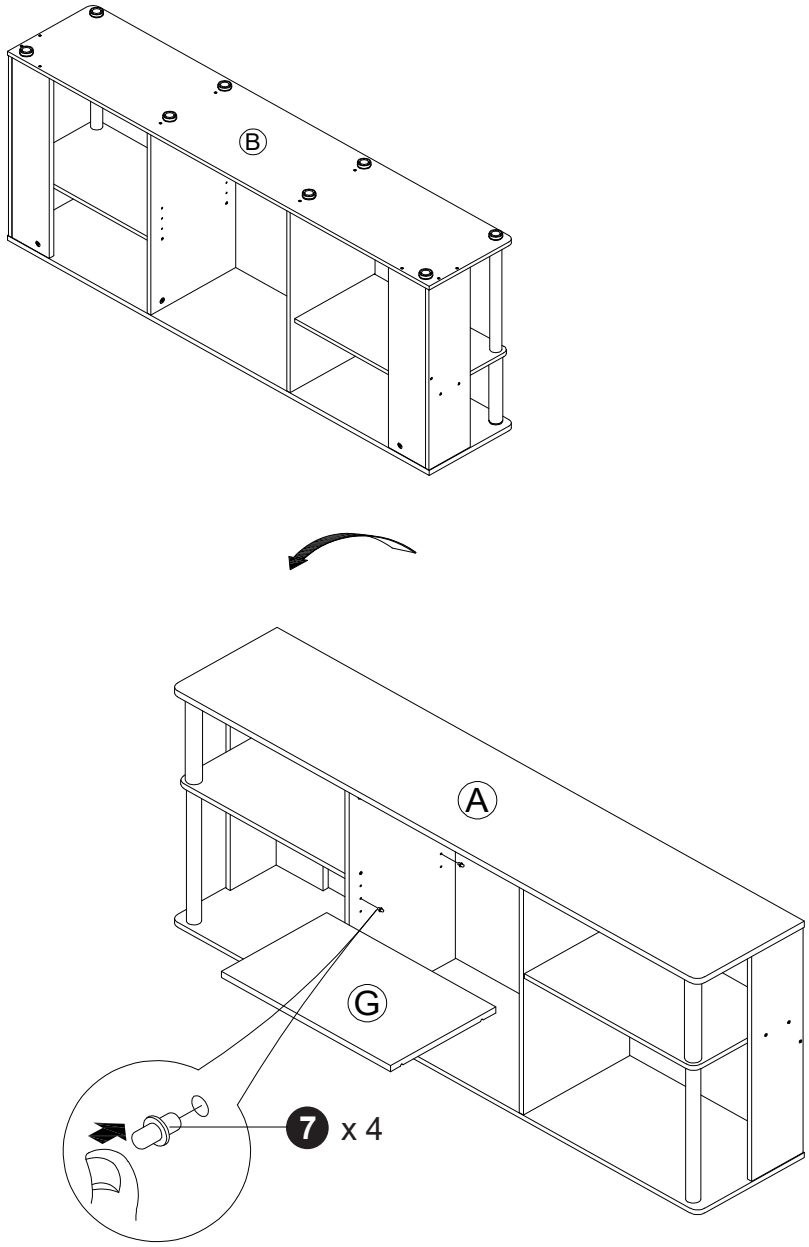

6

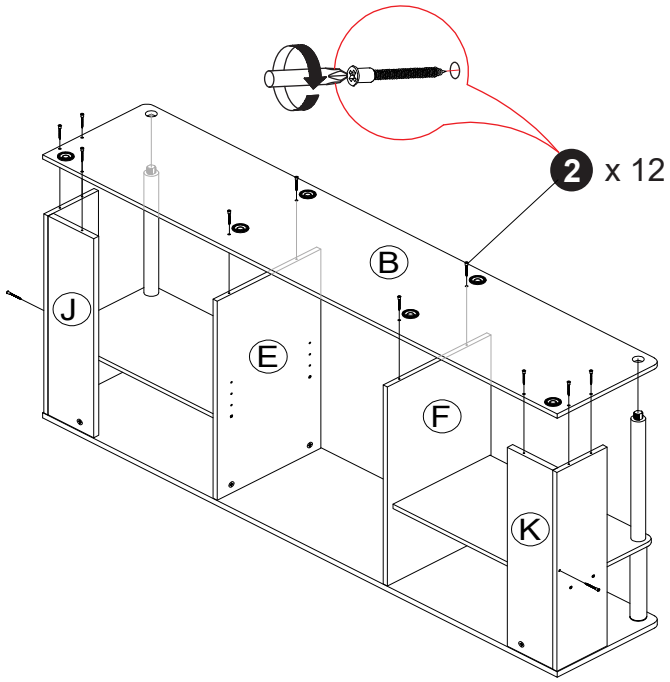

7

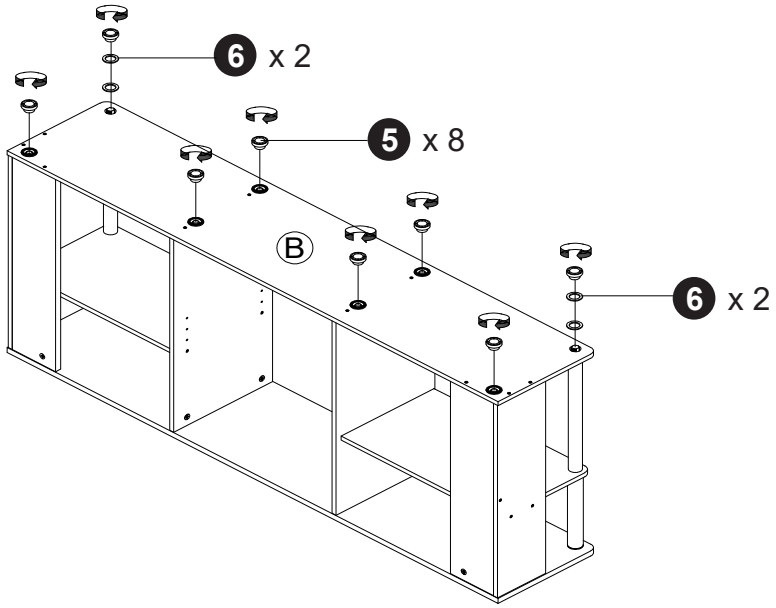

1

1.1

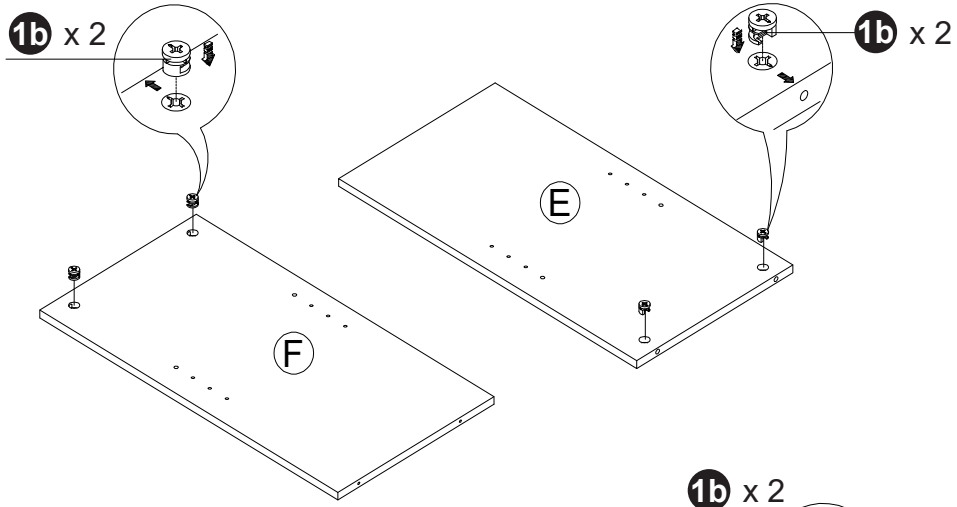

1.2

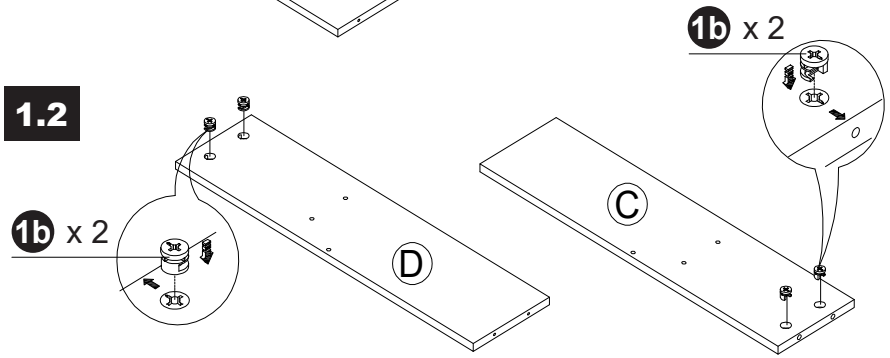

1.3

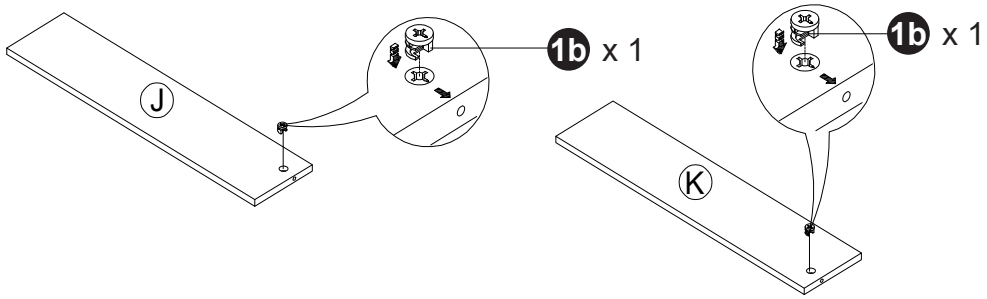

2

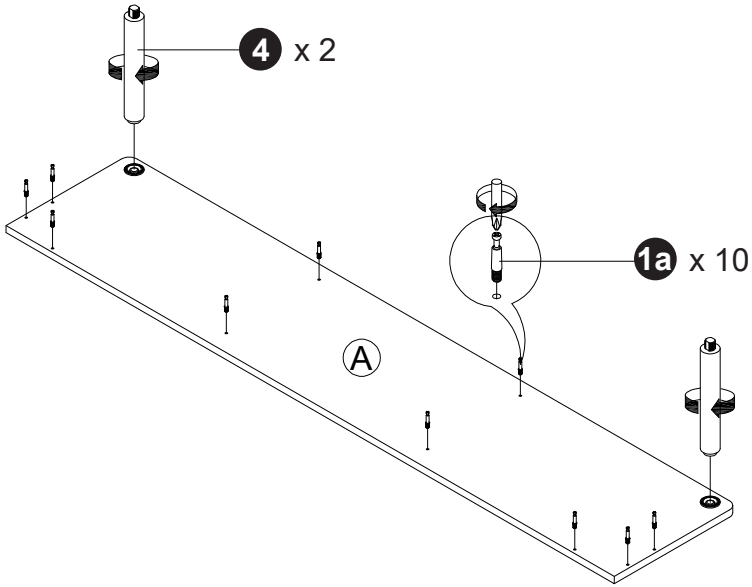

3

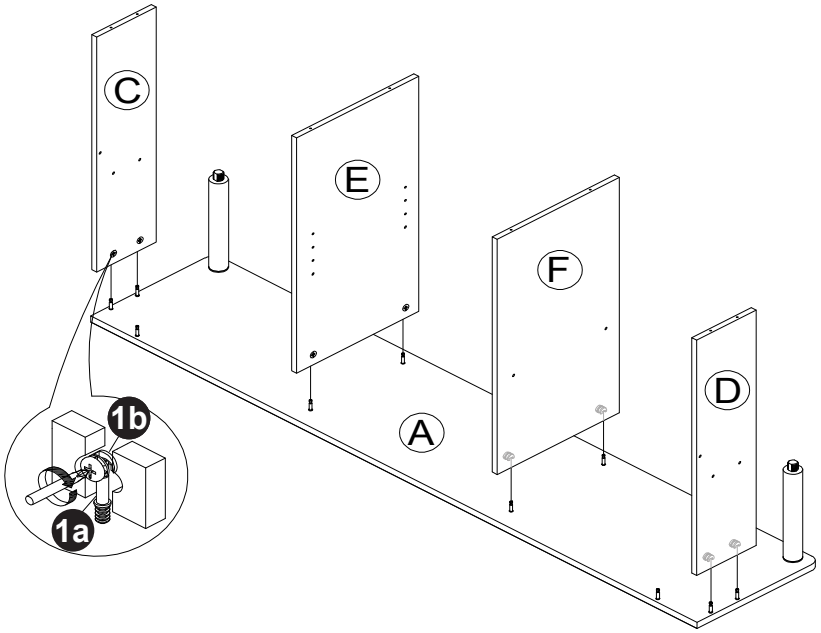

4

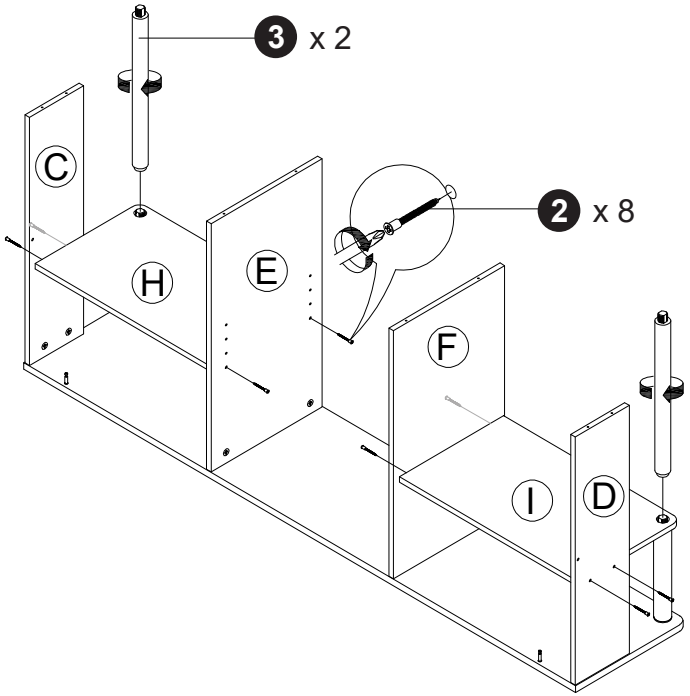

5

