14

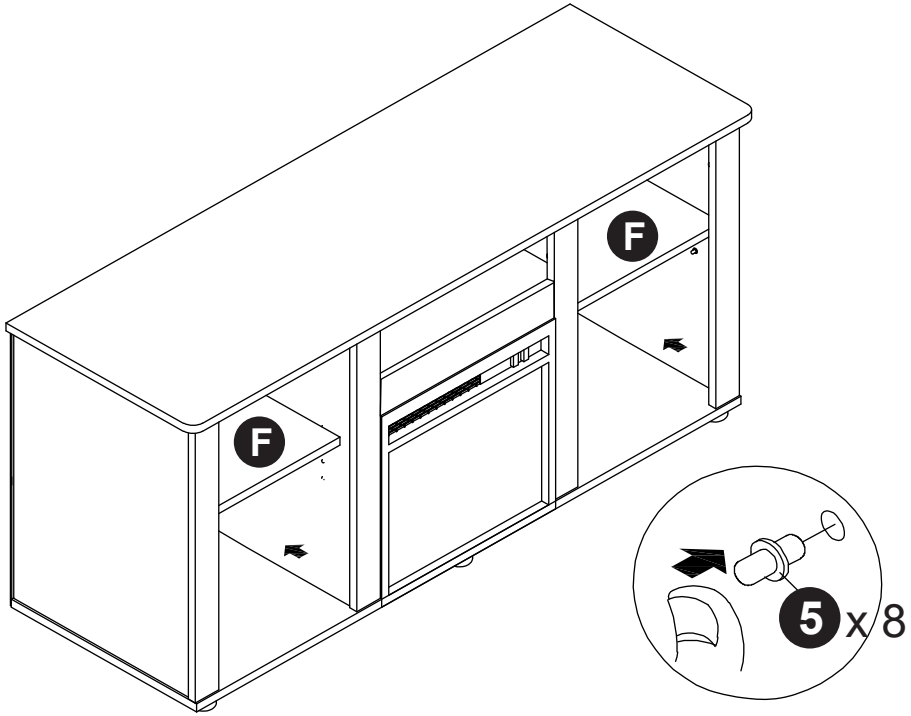

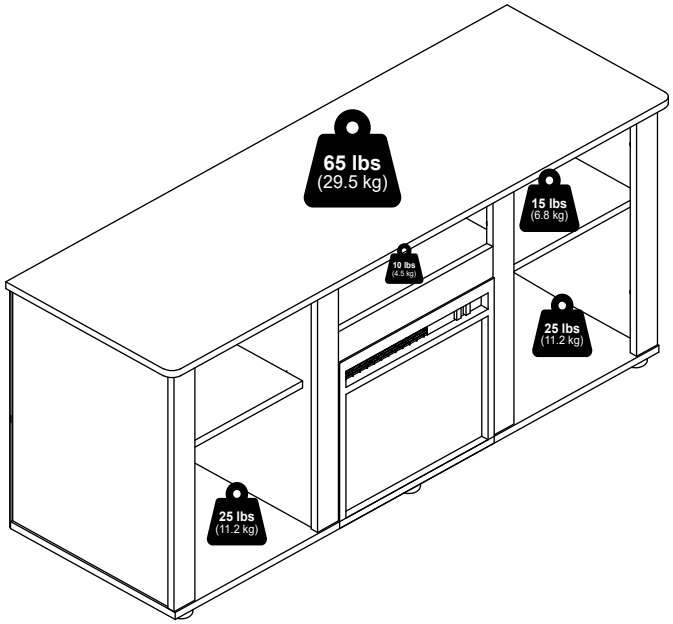

Furinno®

Fits Space, Fits Budget



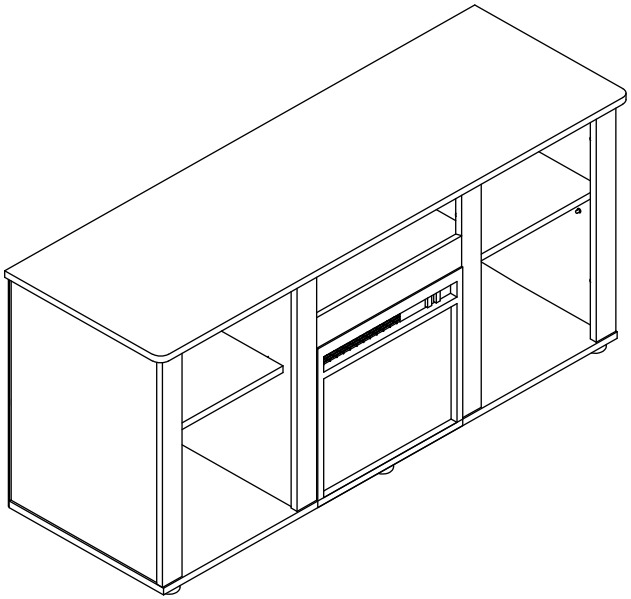

MODEL: 22228

support@furinno.com

www.furinno.com

2222820230902

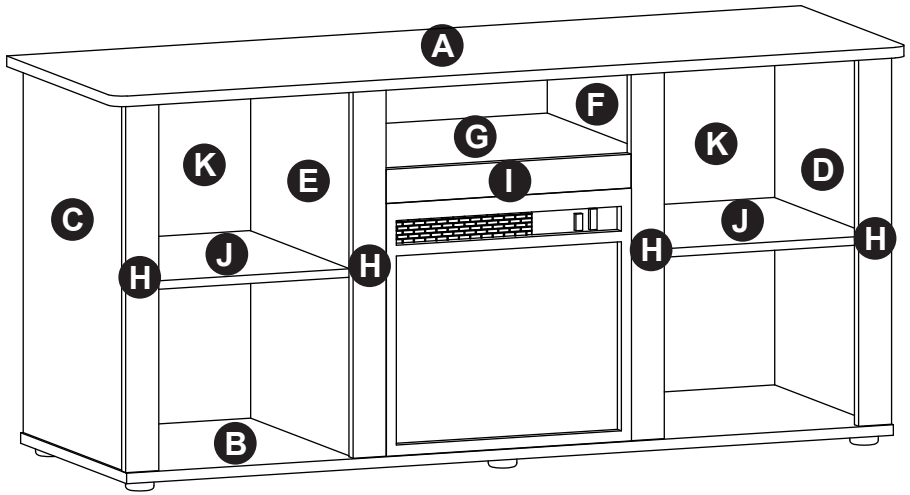

1 x 18 7 x 34mm	2 x 18 15mm	3 x 20 M6 x 30mm	4 x 12 M5 x 40mm
5 x 8 5 x 6 x 16mm	6 x 5 M4 x 11mm	7 x 1 1.2 x 24 x 90mm	8 x 36 2.5 x 18mm
9 x 1	10 x 6 Ø40 x 14mm	11 x 1	

12

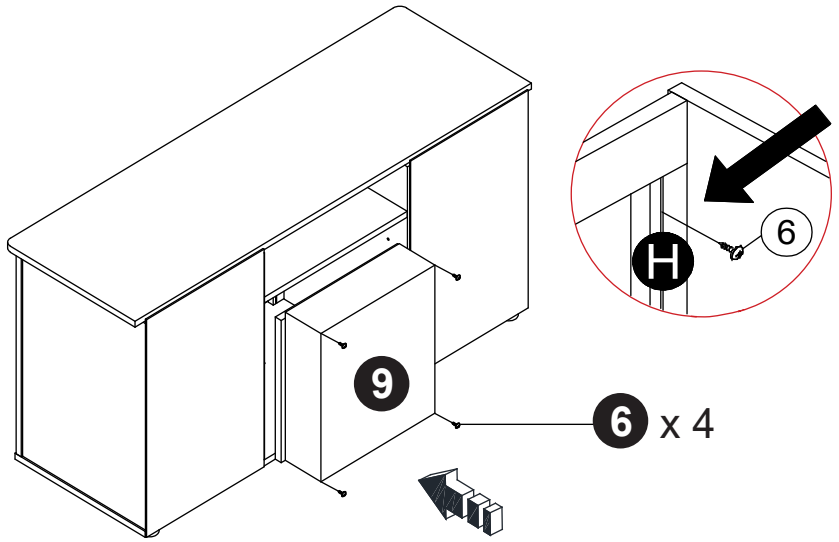

13

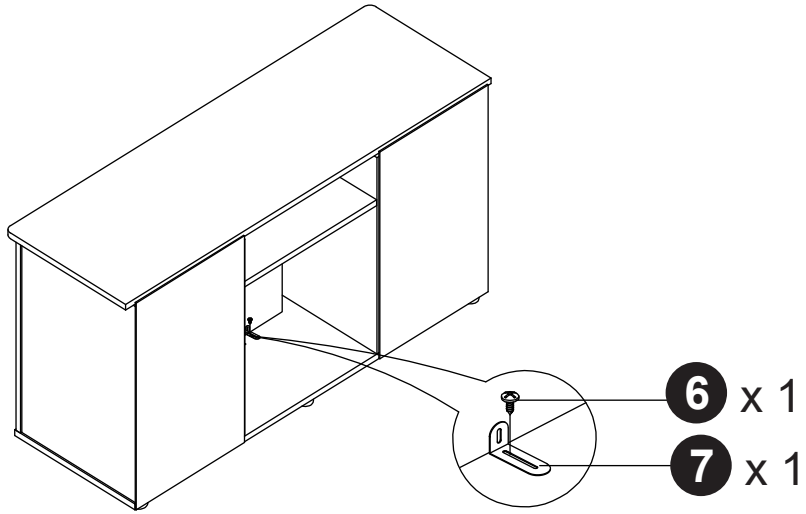

10

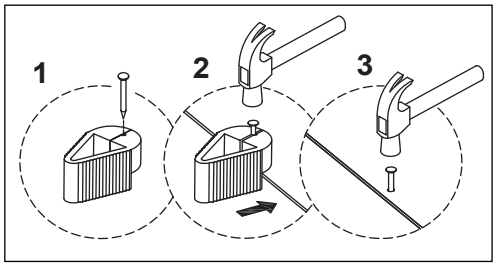

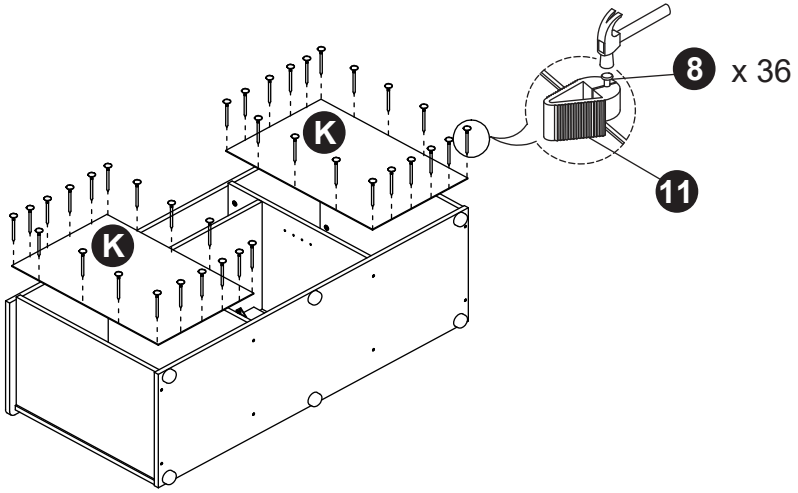

11

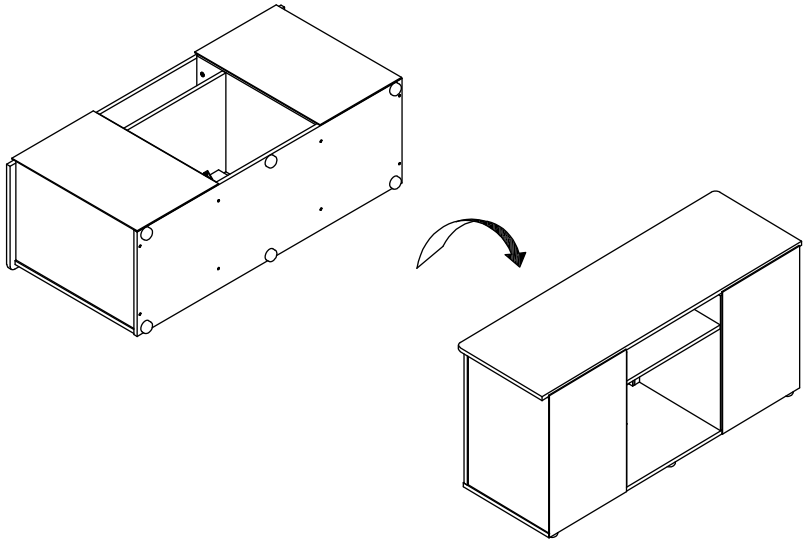

1

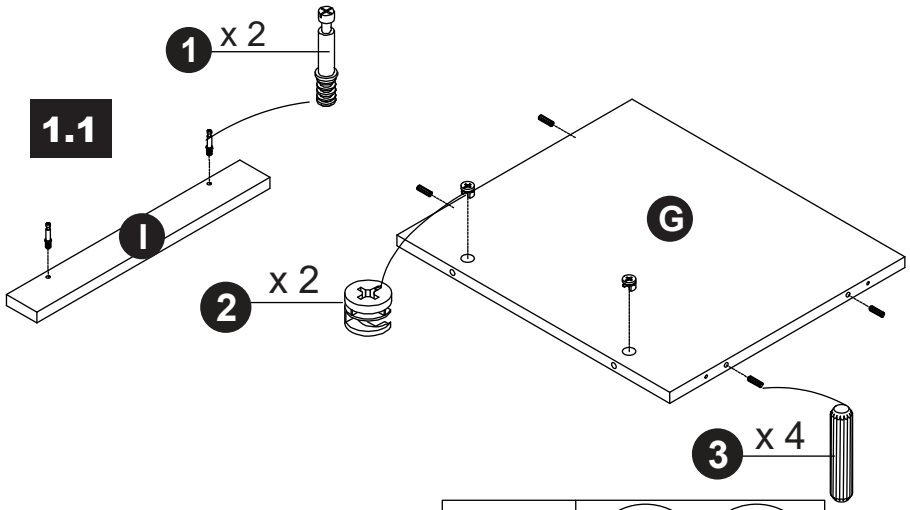

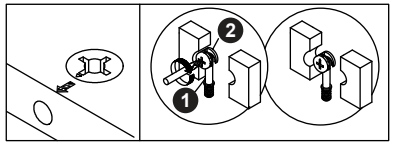

1.2

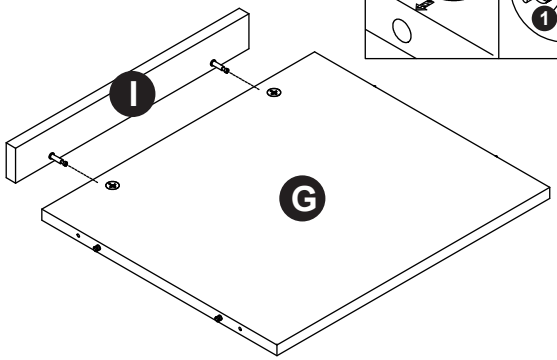

2

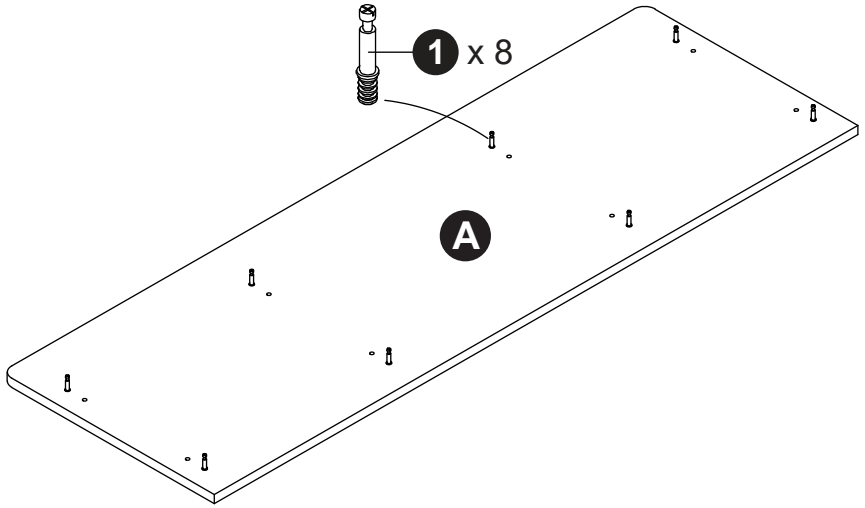

3

3.1

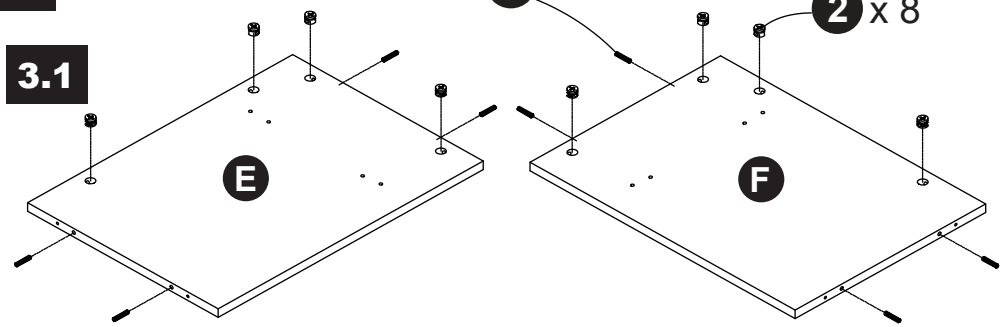

3.2

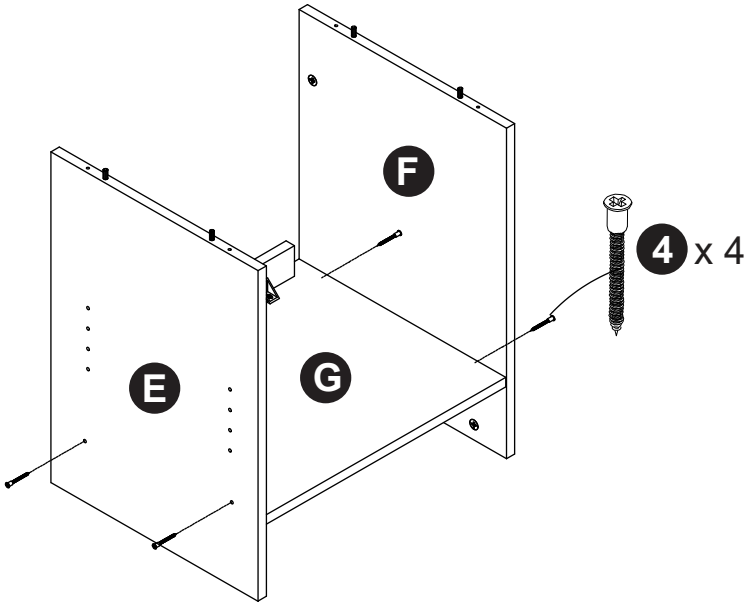

3.3

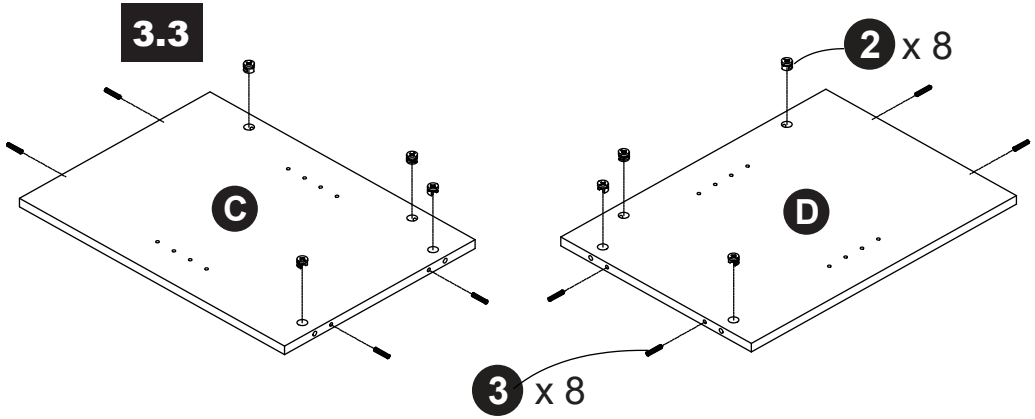

8

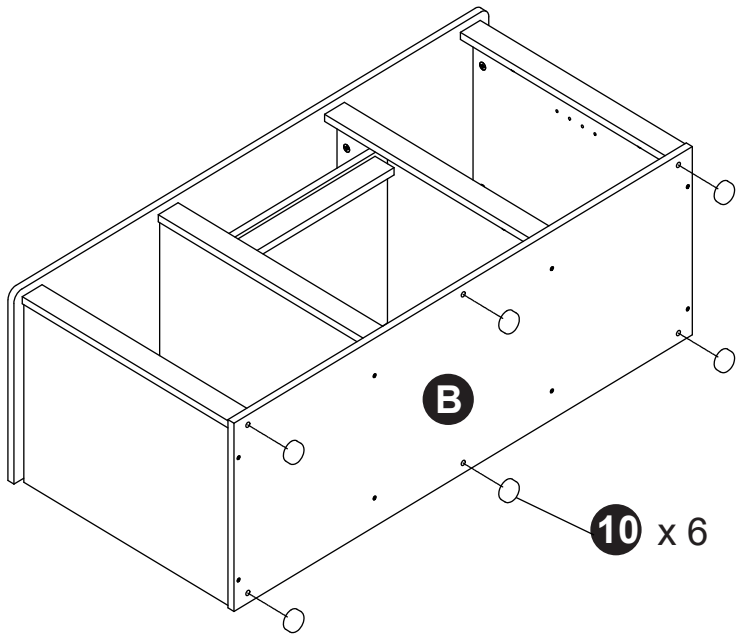

9

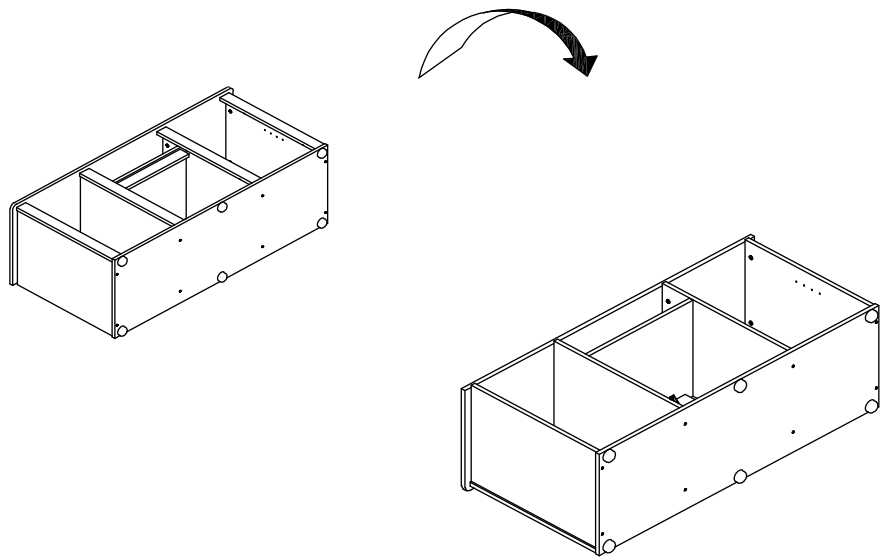

7

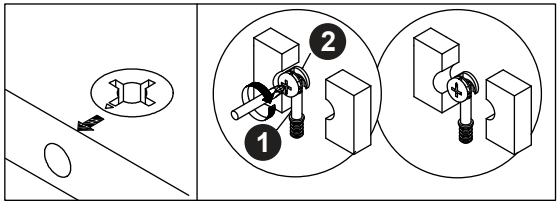

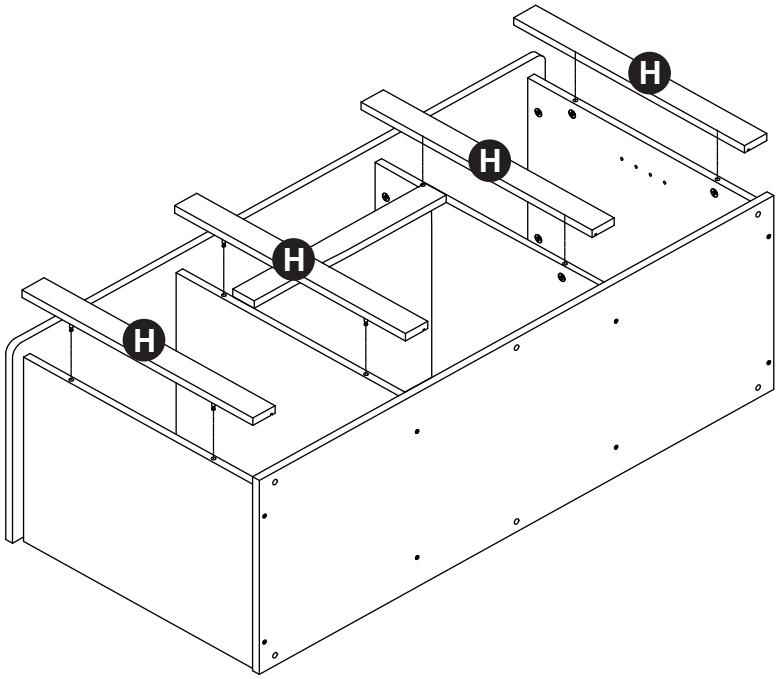

4

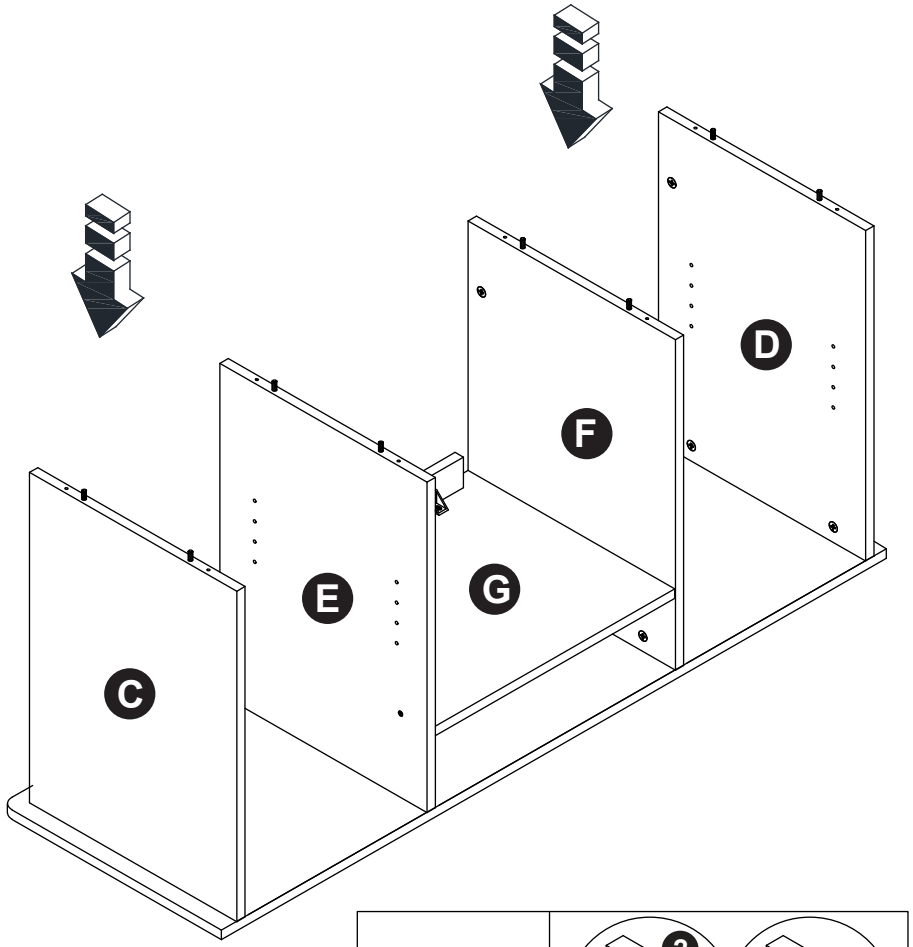

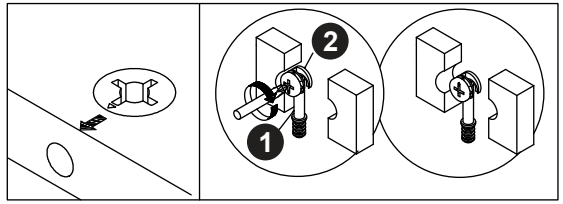

5

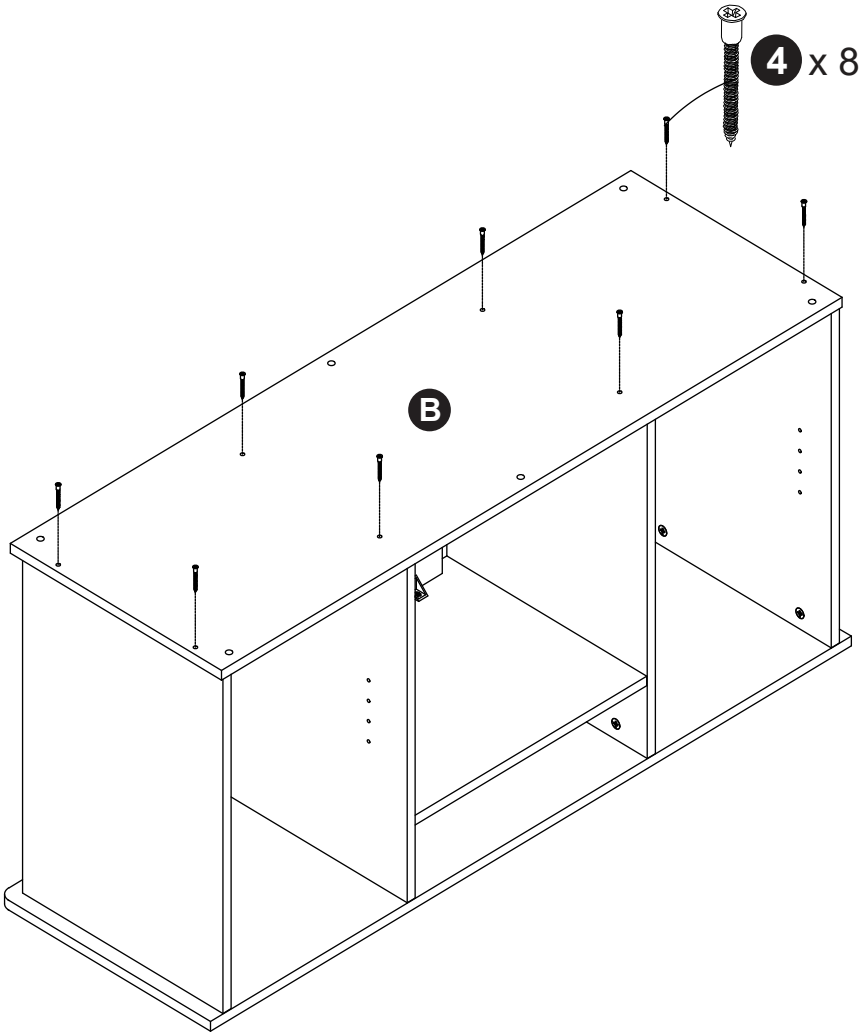

6

