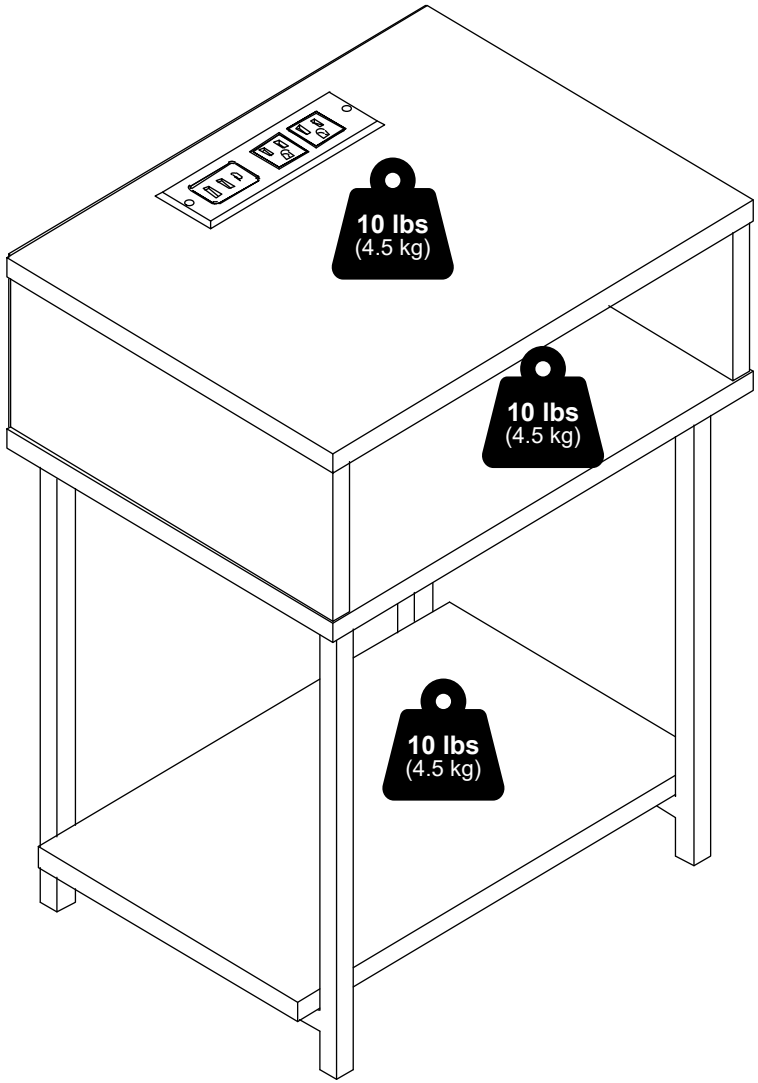

Furinno®

Fits Space, Fits Budget



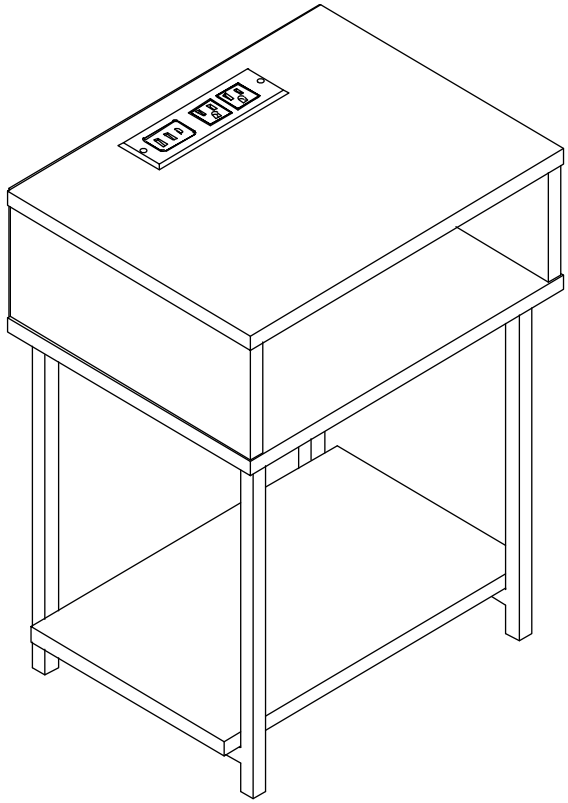

MODEL: 22353

support@furinno.com

www.furinno.com

2235320230705

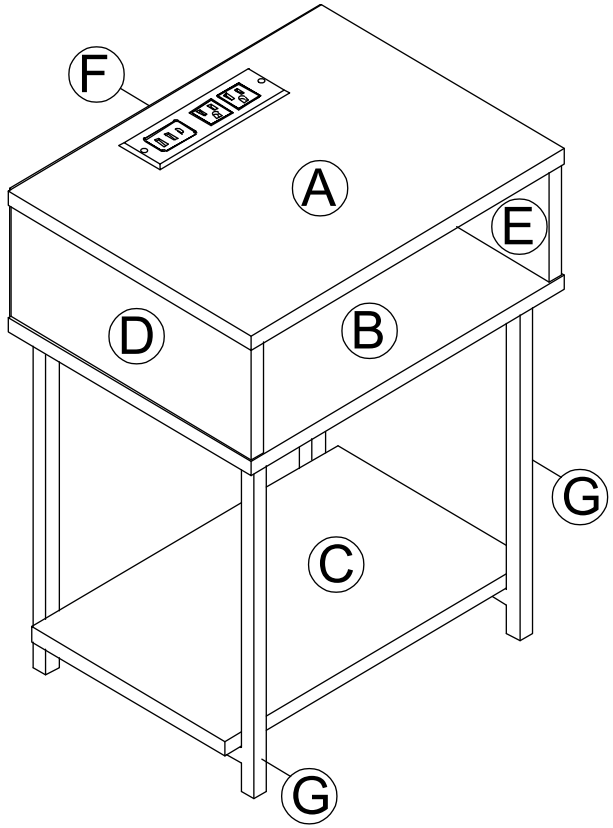

1 x 4 M6 X 31mm	2 x 4 15mm	3 x 8 M4 X 11mm	4 x 4 M5 X 40mm
5 x 2 M4 X 12mm	6 x 12 2.5 x 18mm	7 x 1	8 x 1

8

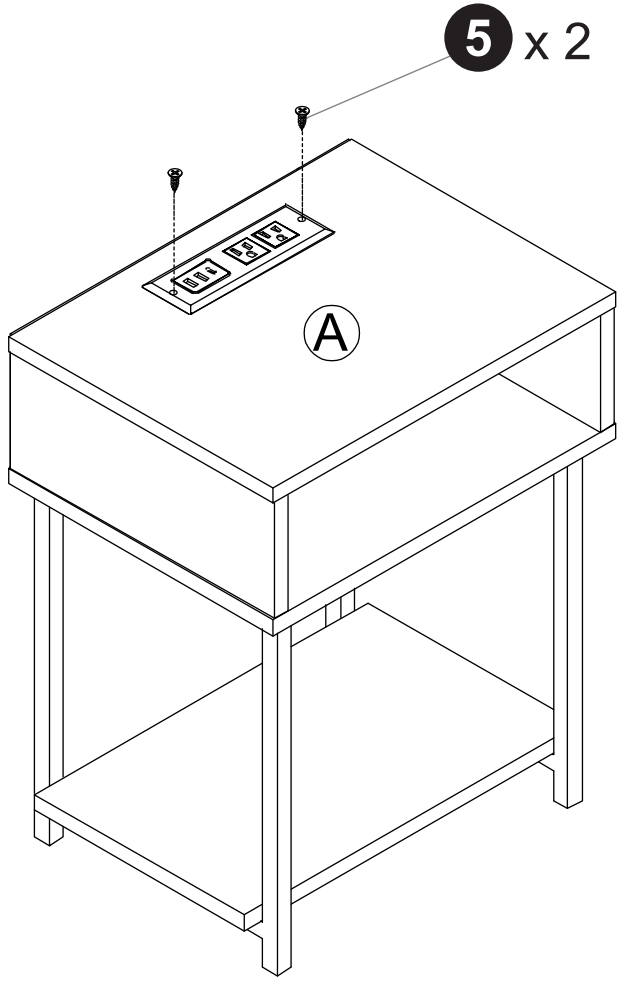

6

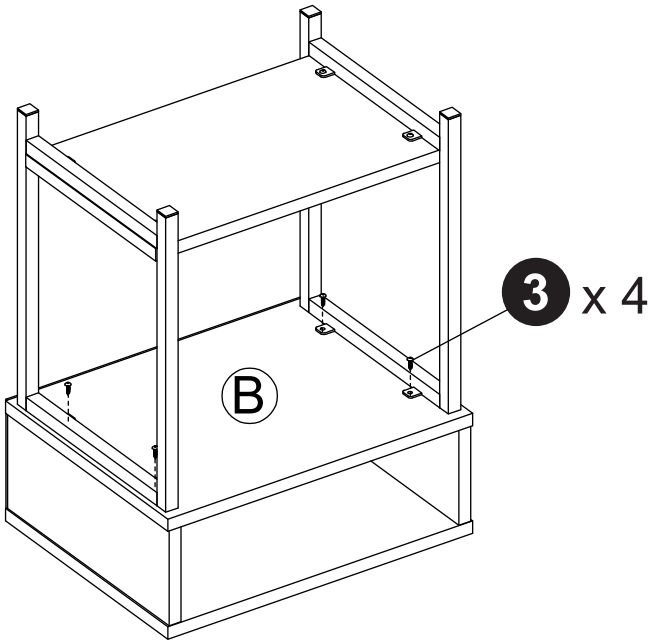

7

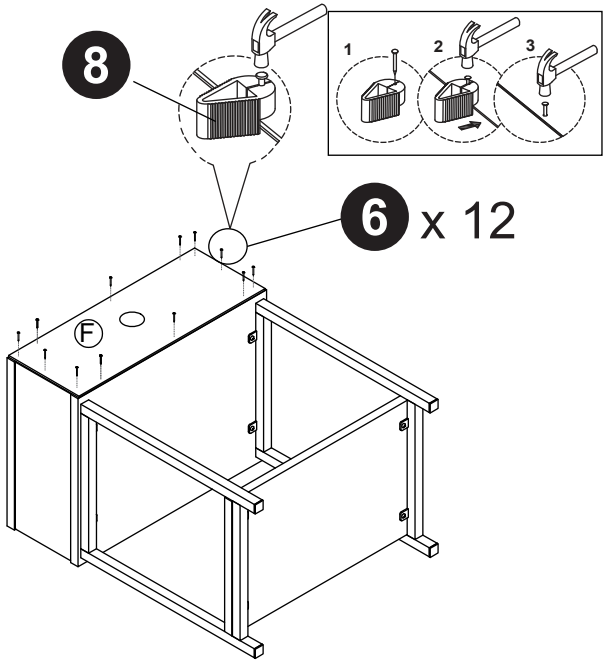

1

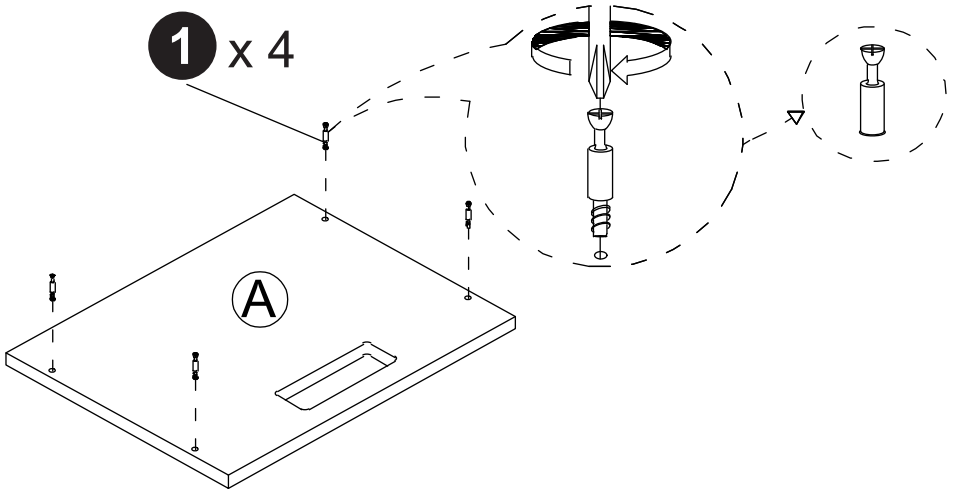

2

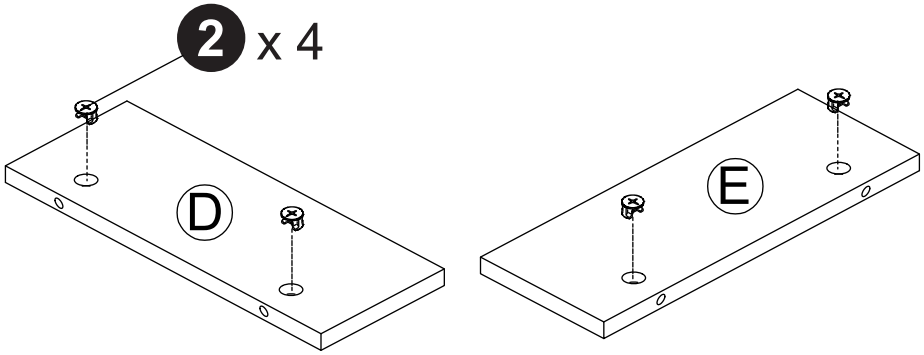

3

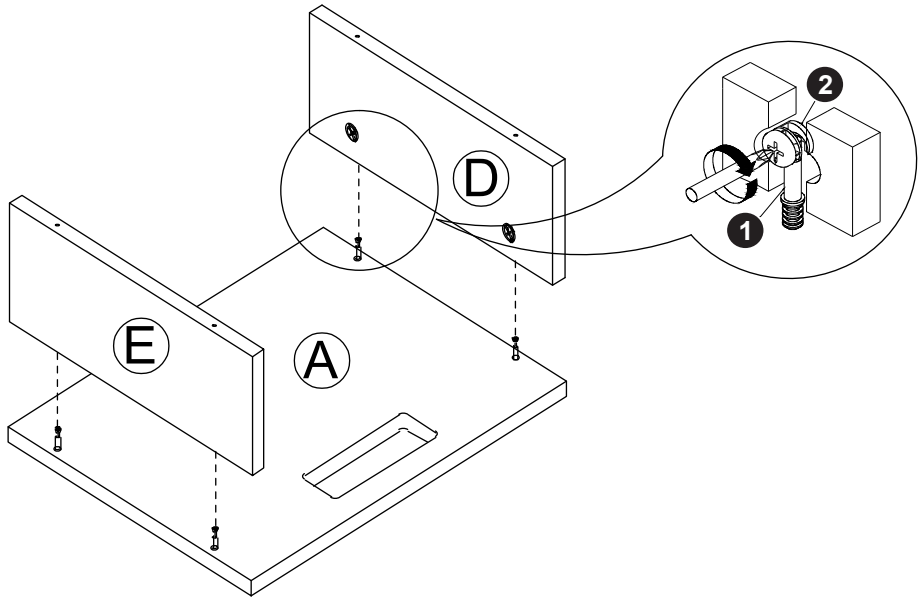

4

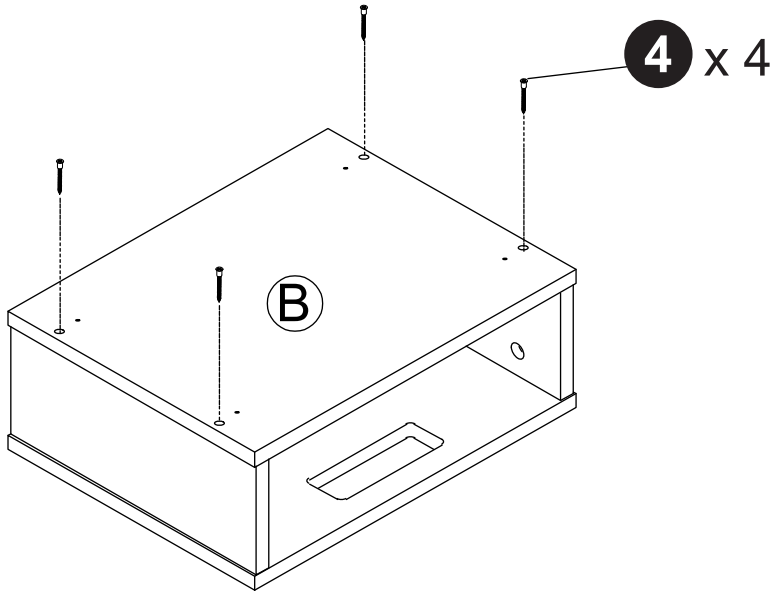

5

