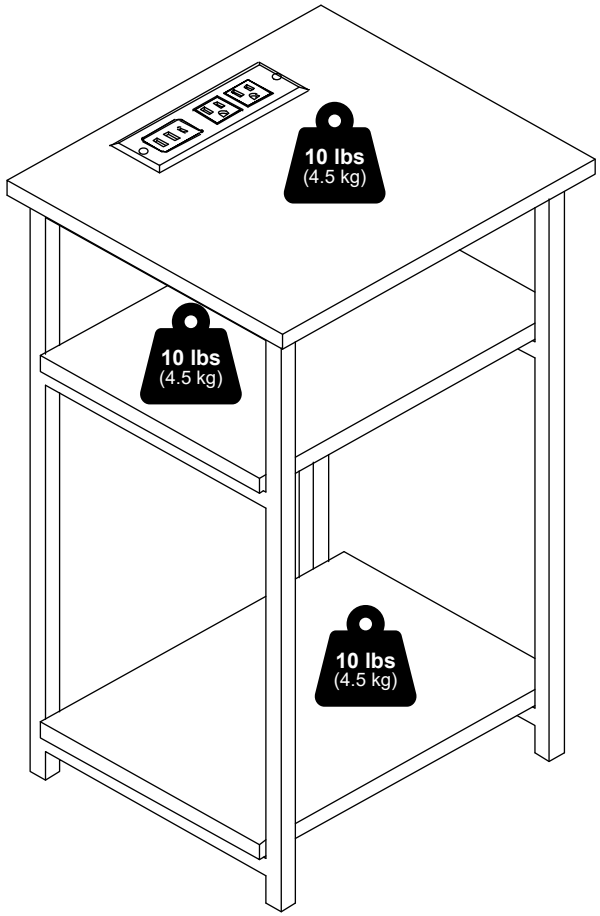

Furinno®

Fits Space, Fits Budget



00:10



x 1

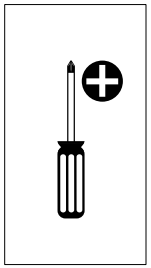

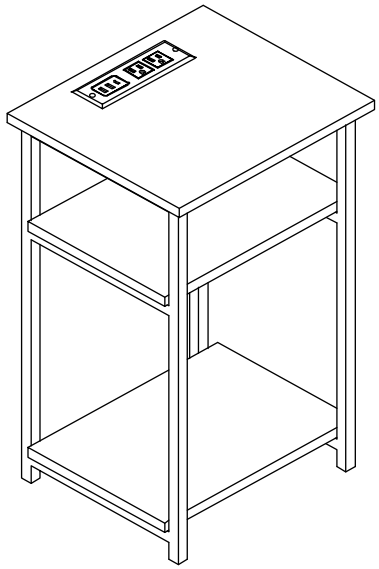

MODEL: 22354

support@furinno.com

www.furinno.com

2235420230705

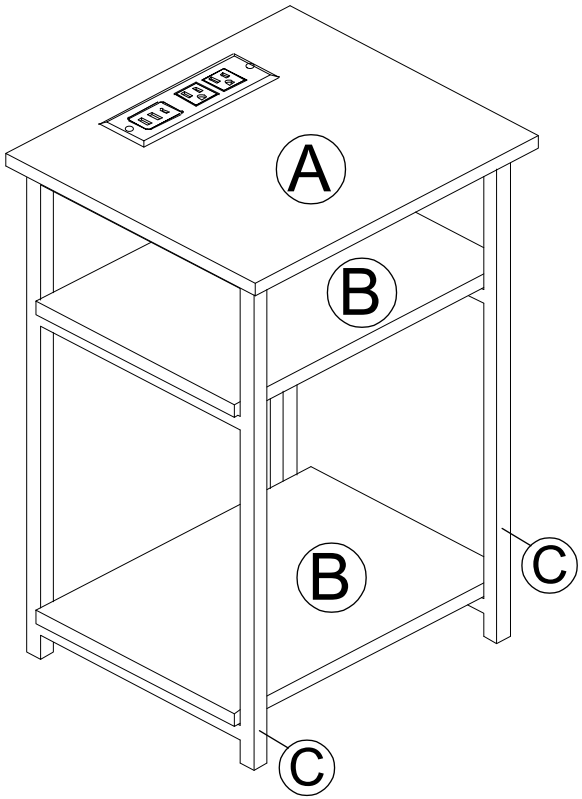

1 x 12	2 x 2	3 x 1
		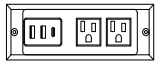
M4 X 11mm	M4 X 12mm	

1

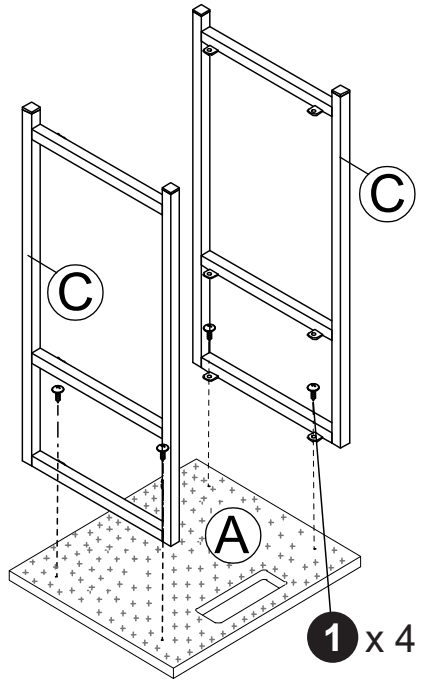

2

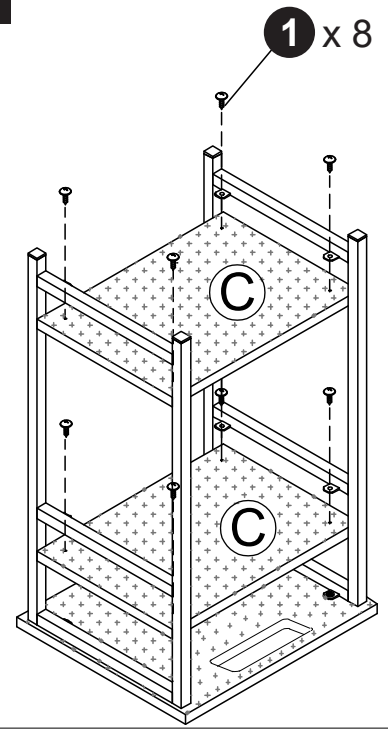

3

