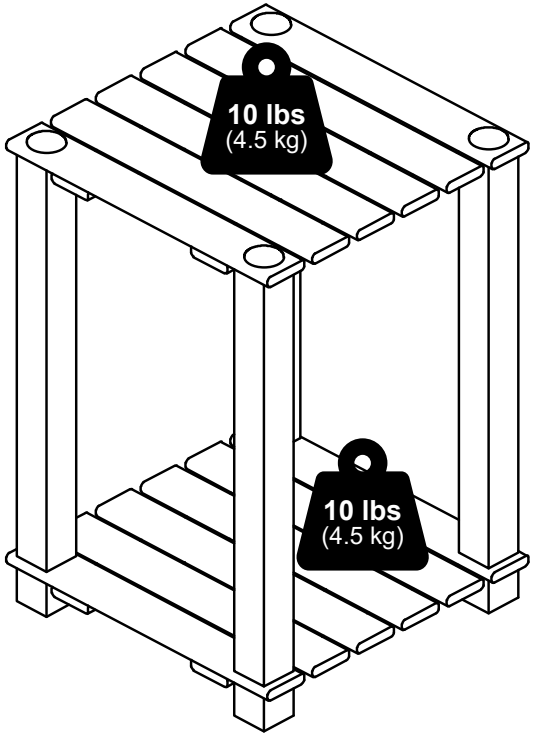

Furinno®

Fits Space, Fits Budget

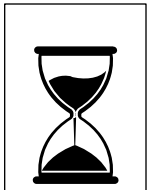

00:10



x 1

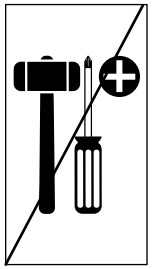

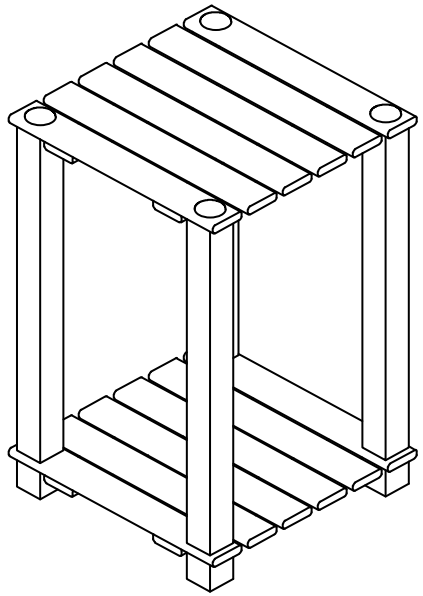

MODEL: 22361

support@furinno.com

www.furinno.com

2236120230529

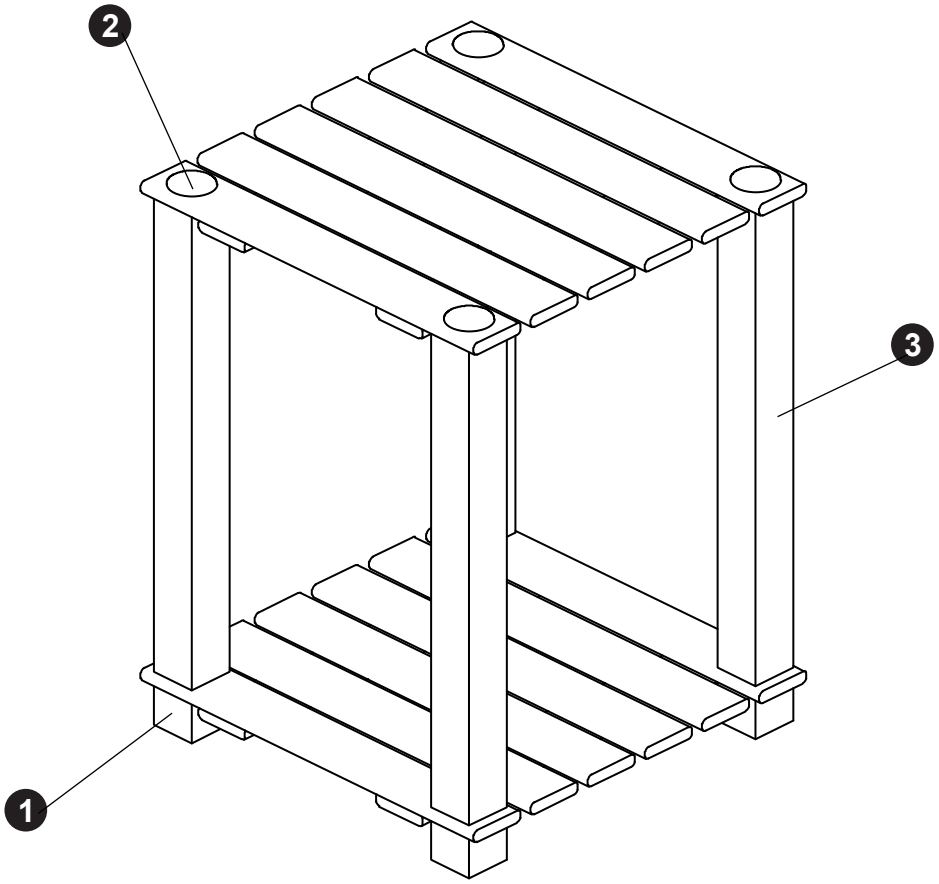

1	2	3
x 4	x 4	x 4
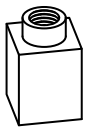		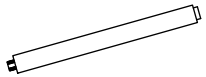
34 x 38mm	32 x 2mm	34 x 440mm

1

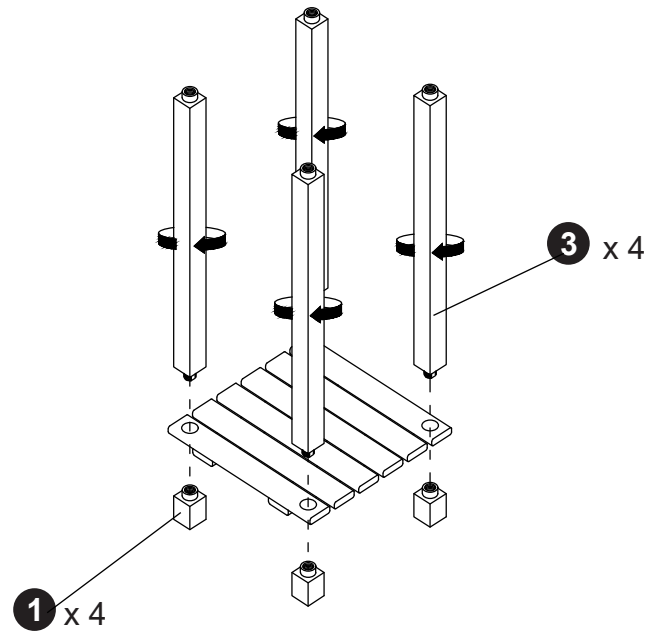

2

