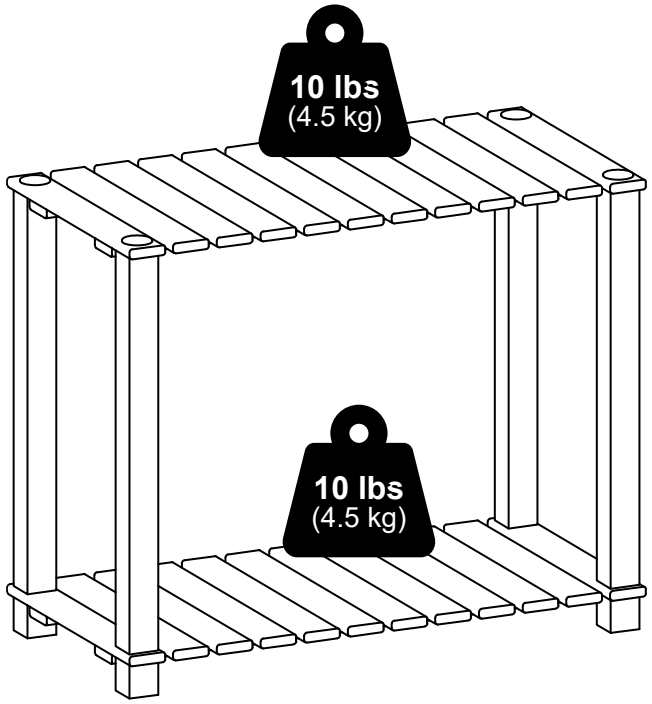

Furinno®

Fits Space, Fits Budget

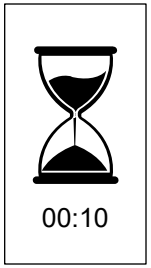



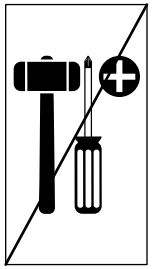

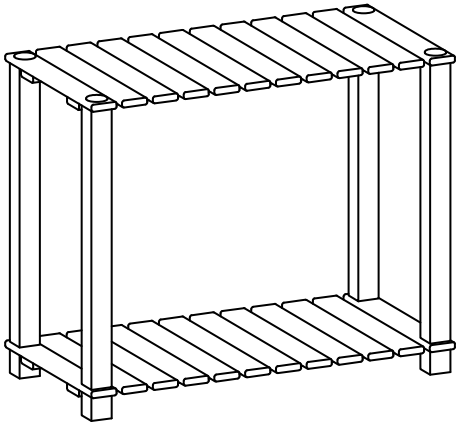

MODEL: 22363

support@furinno.com

www.furinno.com

2236320230529

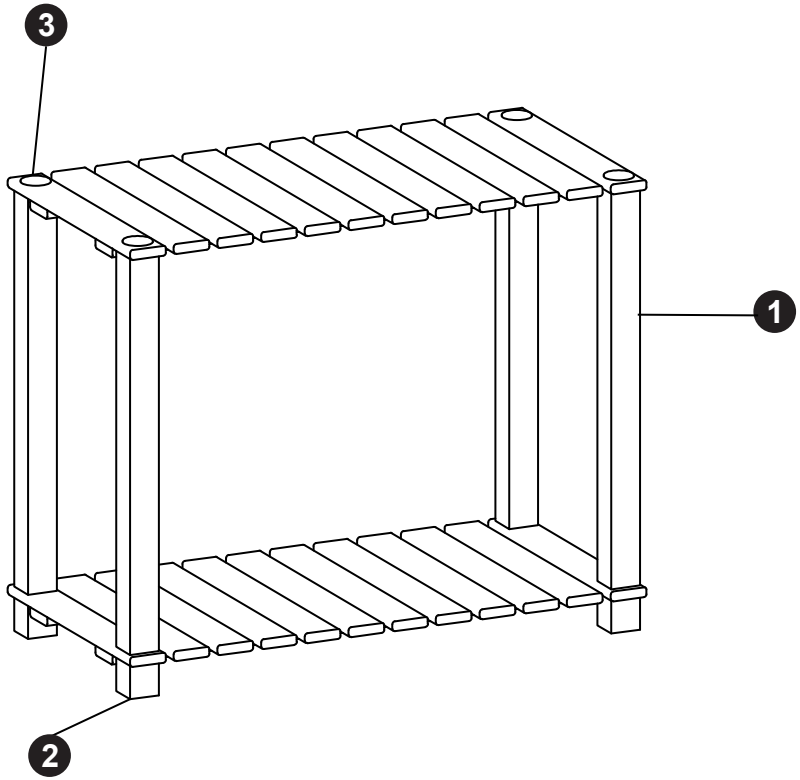

1	2	3
x 4	x 4	x 4
34 x 440mm	34 x 38mm	32 x 2mm

1

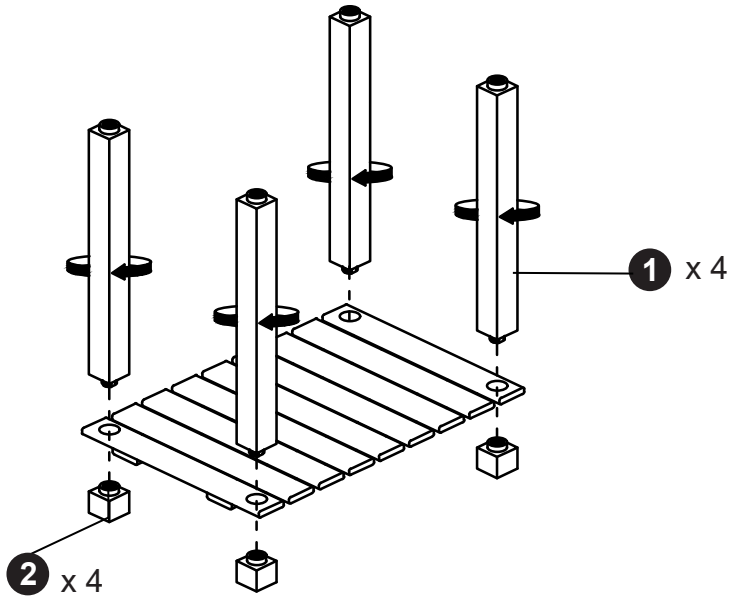

2

