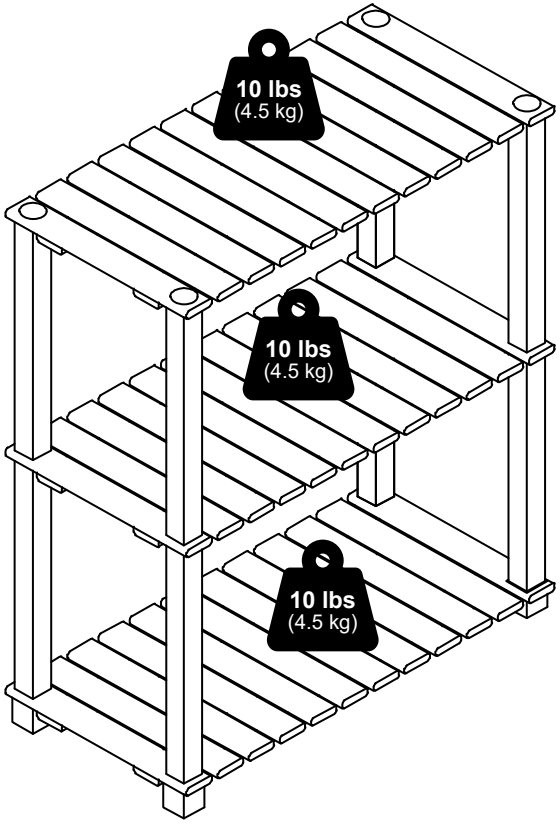

Furinno®

Fits Space, Fits Budget

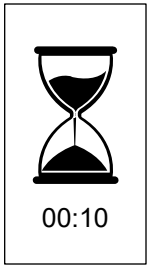



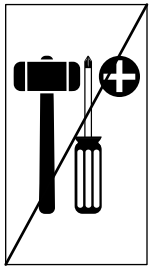

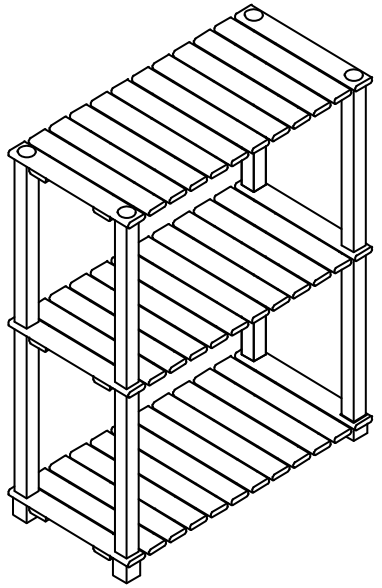

MODEL: 22364

support@furinno.com

www.furinno.com

2236420230529

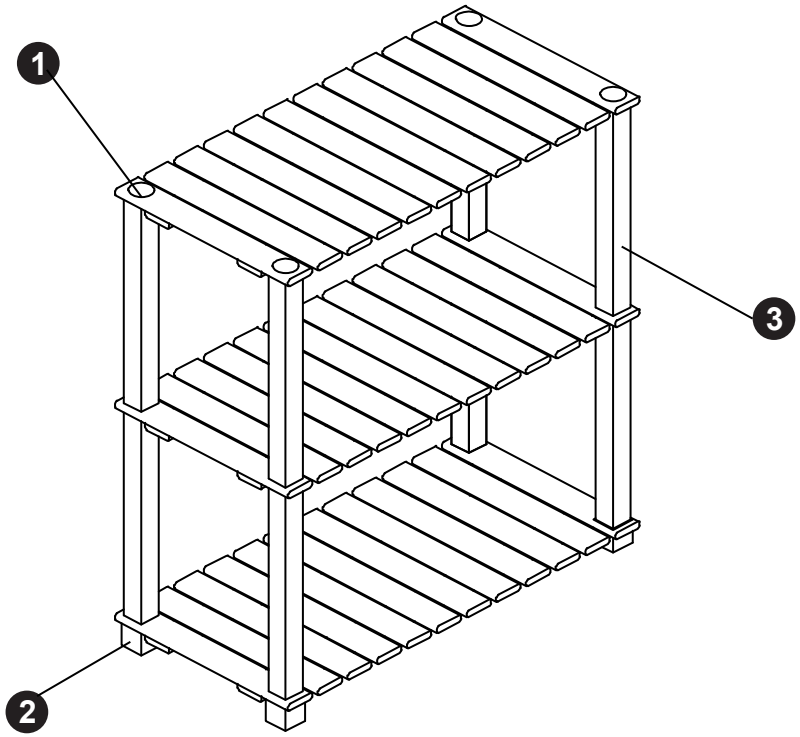

1 x 4	2 x 4	3 x 8
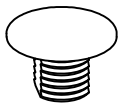	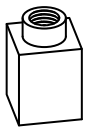	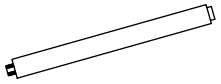
32 x 2mm	34 x 38mm	30 x 340mm

1

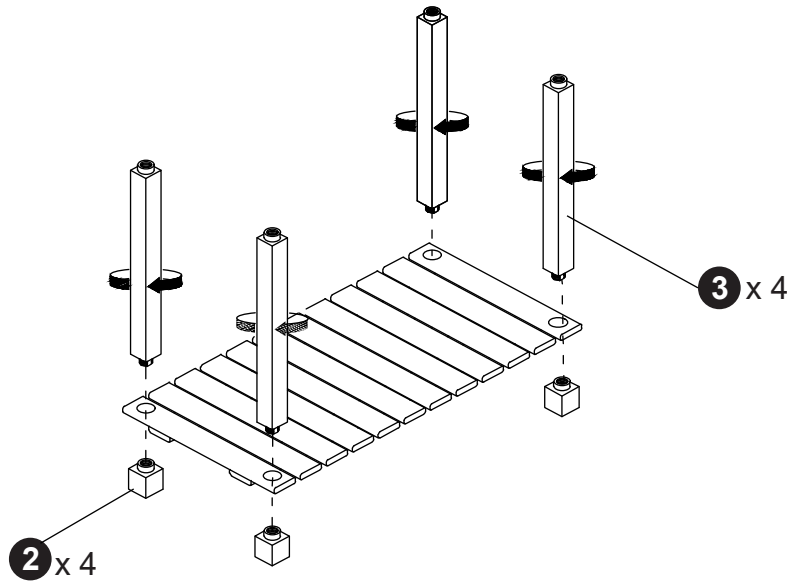

2

