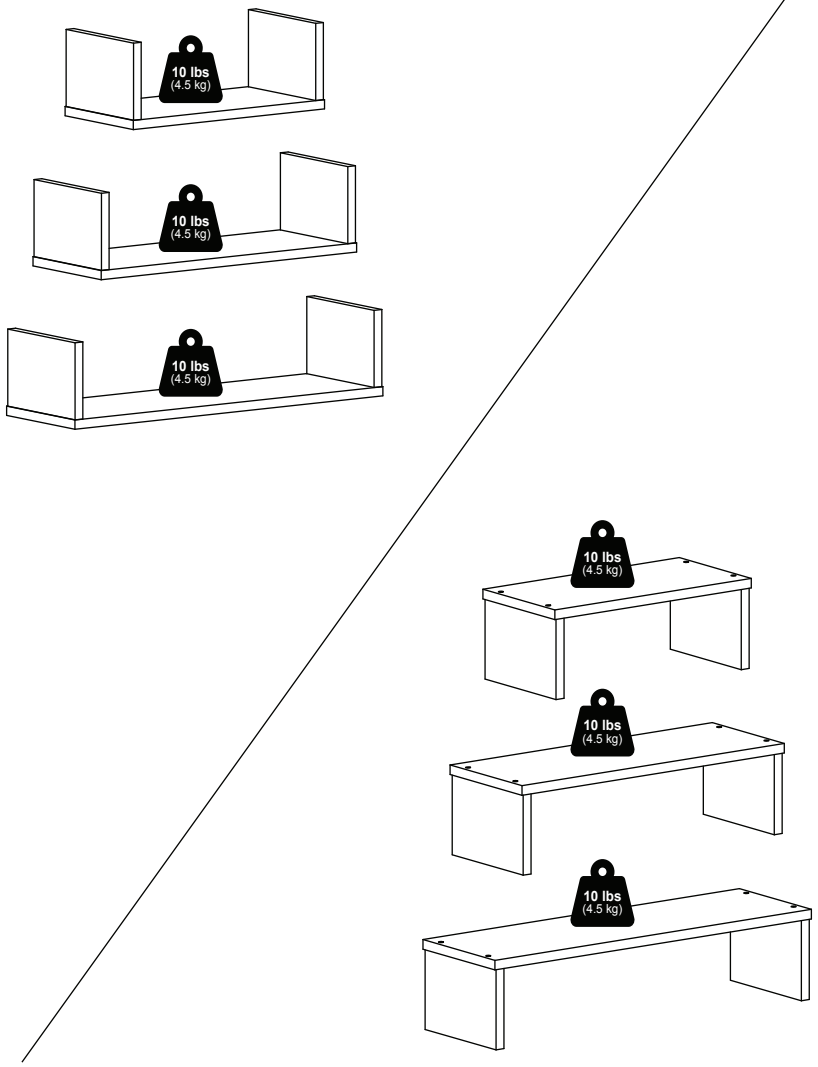

Furinno®

Fits Space, Fits Budget





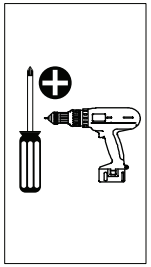

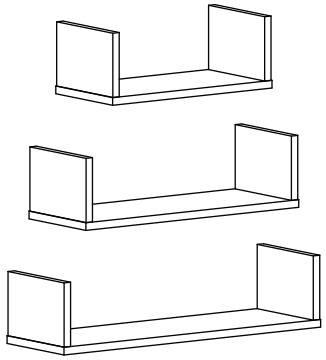

MODEL: 23095

support@furinno.com ***www.furinno.com***

2309520231110

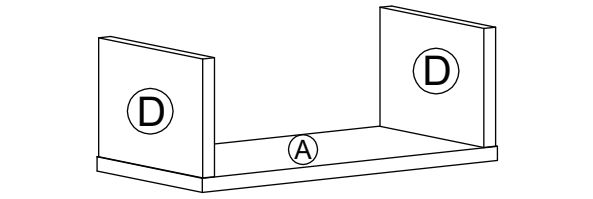

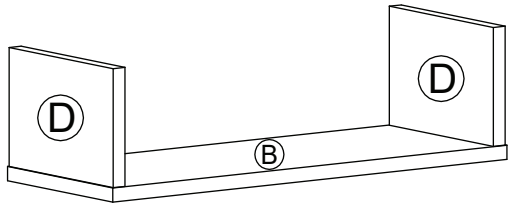

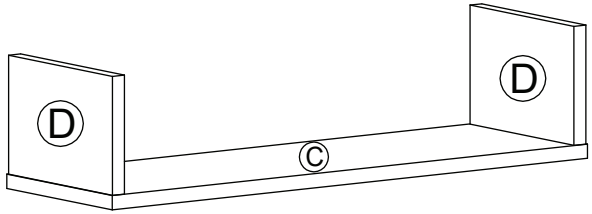

1 x 12 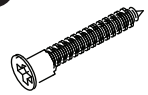 M5 x 40mm	2 x 6  M4 X 32mm	3 x 6 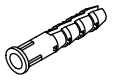 1 1/4”	4 x 6  M3.5 X 12mm
5 x 6 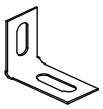 17 X 22mm		6 x 6 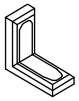	

1

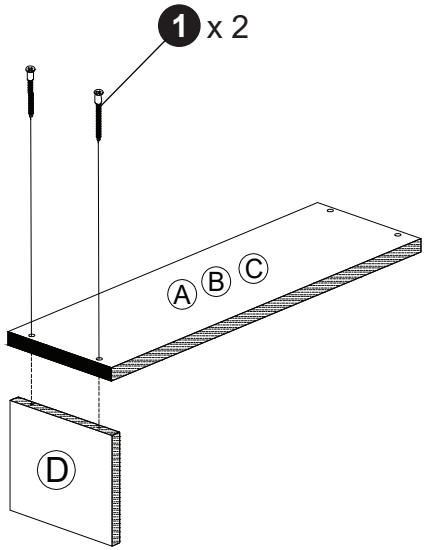

2

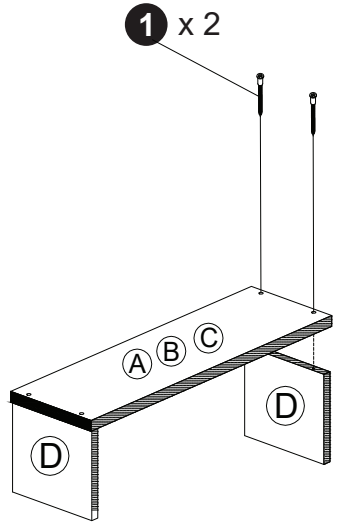

3

