10

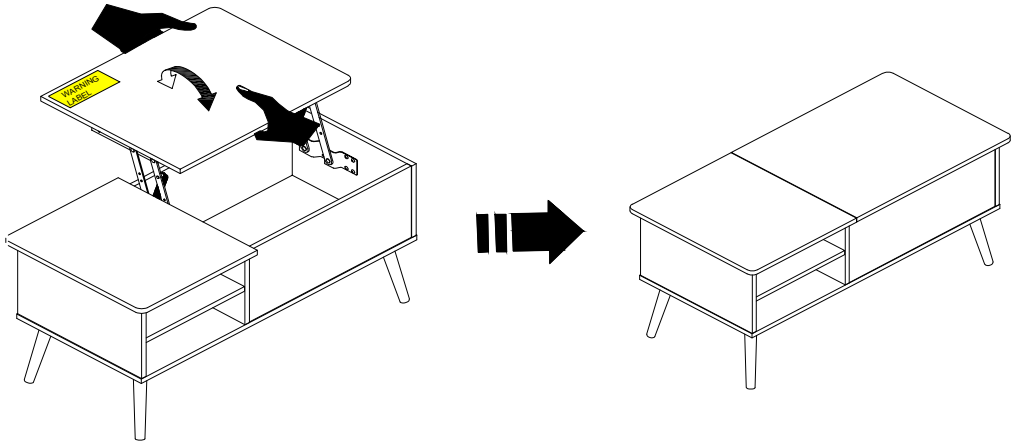

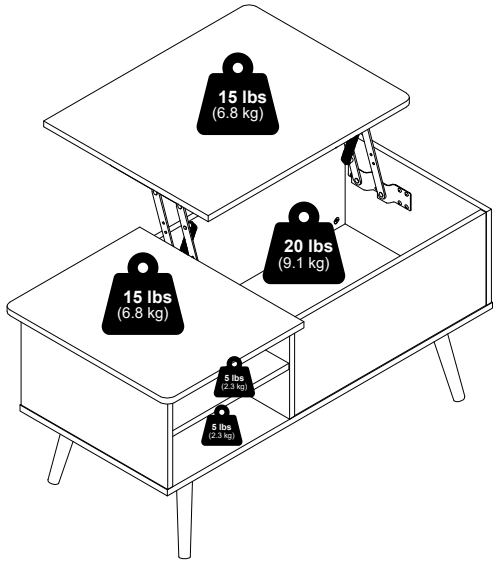

Furinno®

Fits Space, Fits Budget



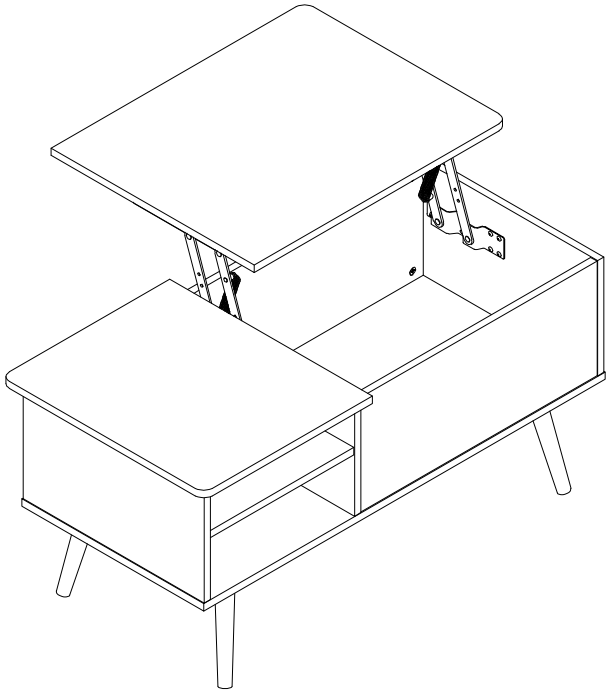

MODEL: 23134

support@furinno.com

www.furinno.com

2313420230921

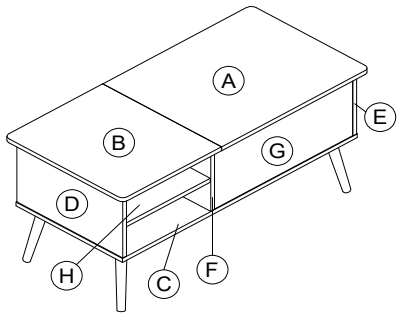

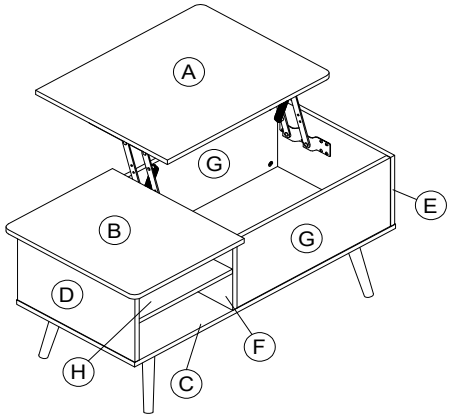

1 x 12 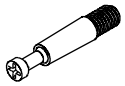 M6 X 31mm	2 x 12  15mm	3 x 14 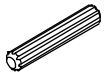 M6 x 30mm	4 x 10  M5 x 40mm
5 x 4 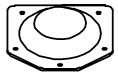	6 x 4 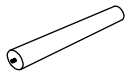 33.5 x 198mm	7 x 1 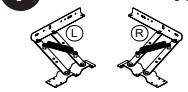	8 x 38  M4 x 11mm
9 x 4  10 x 1.7mm	10 x 4  5 x 6 x 16mm	11 x 4  M5 x 20mm	

9

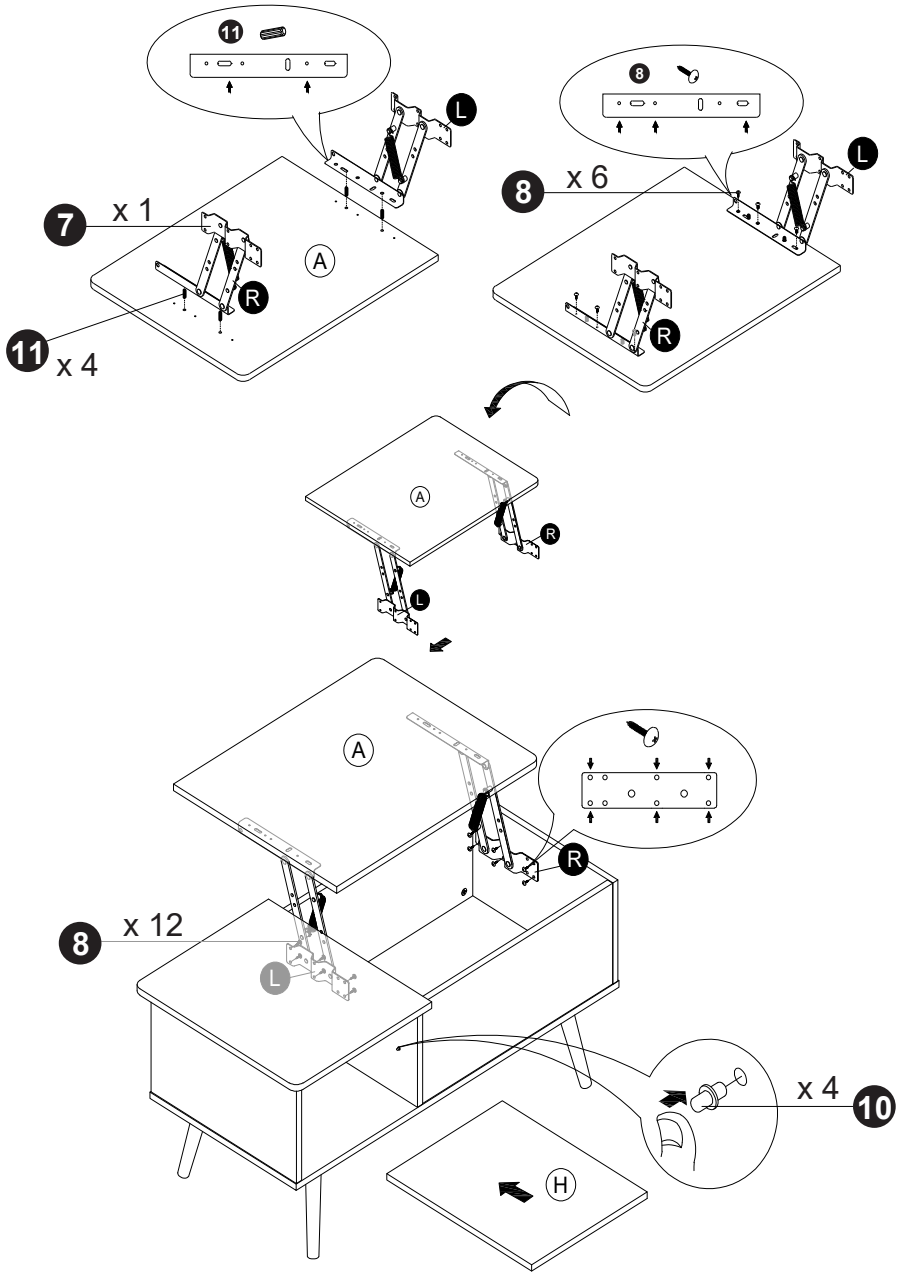

7

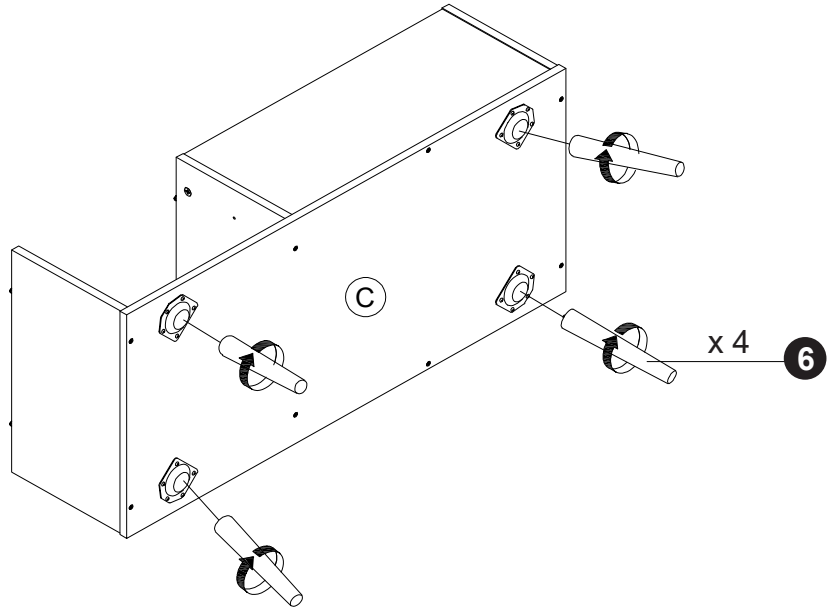

8

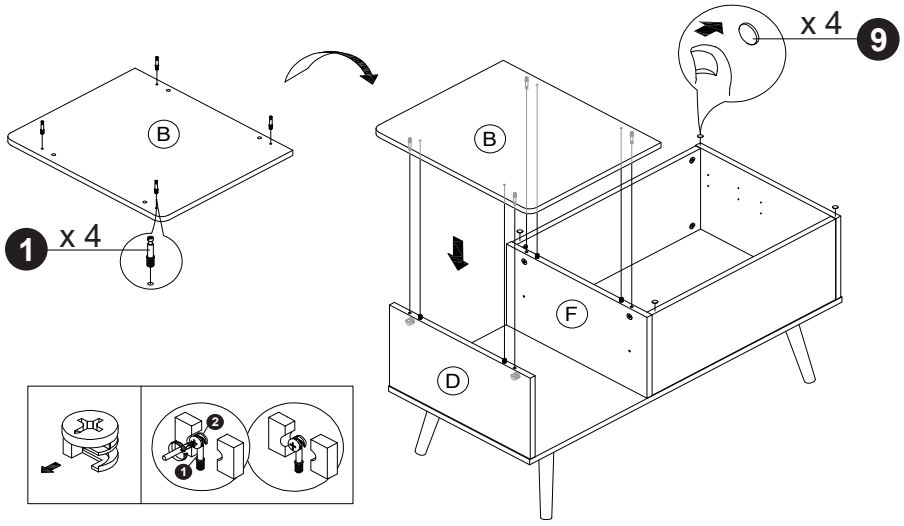

1

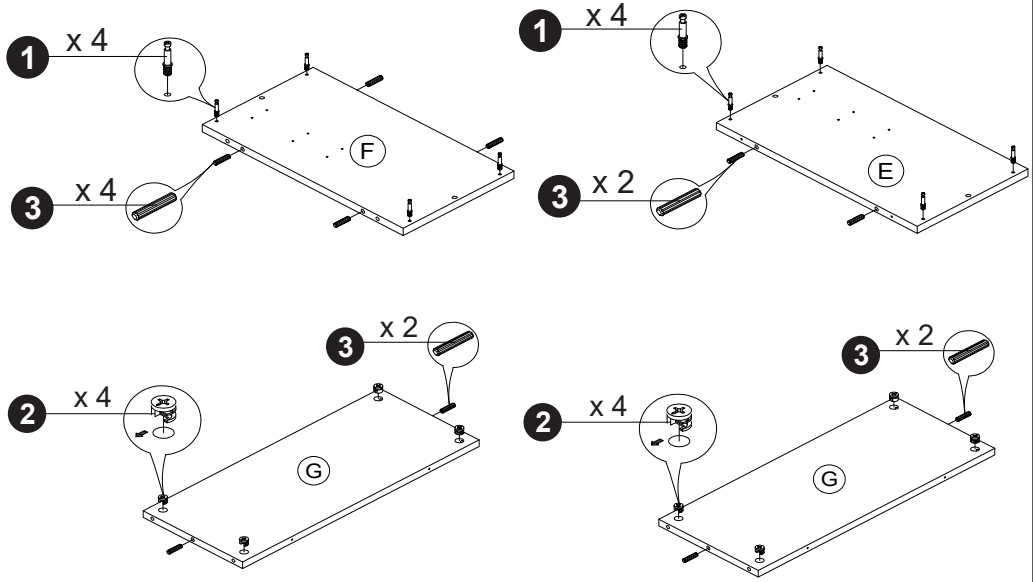

2

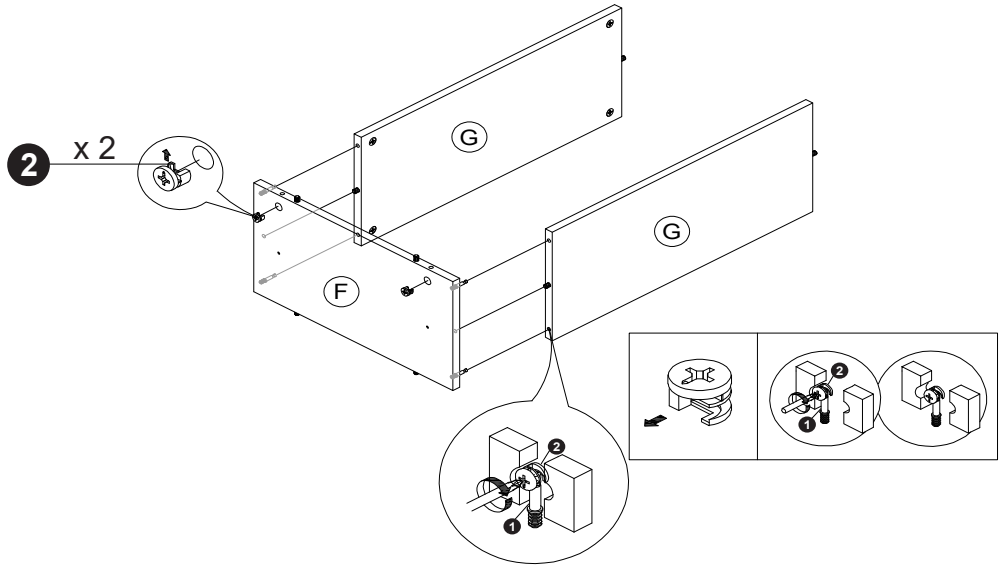

3

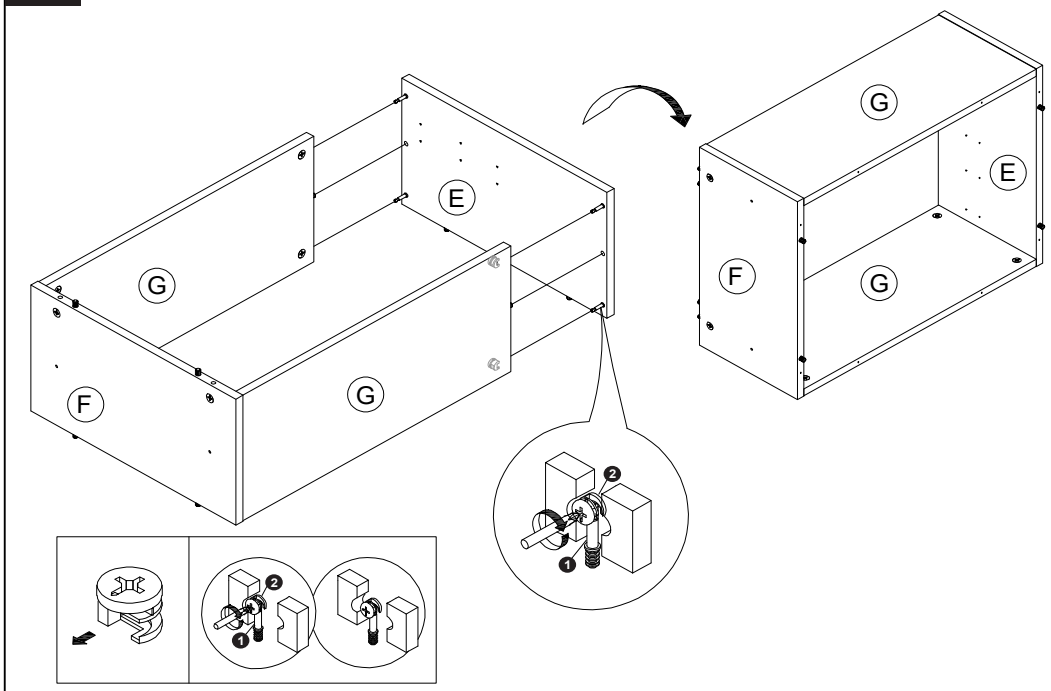

4

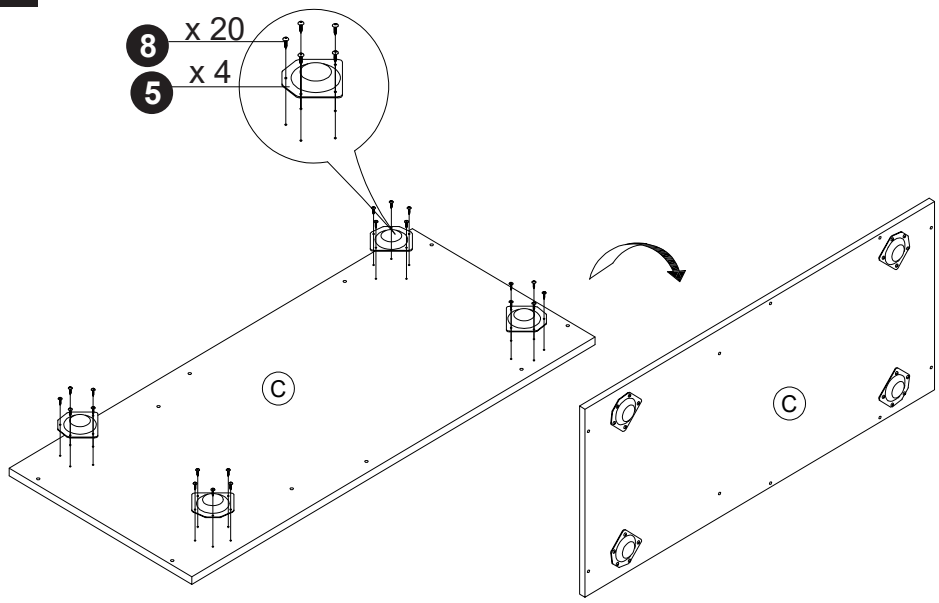

5

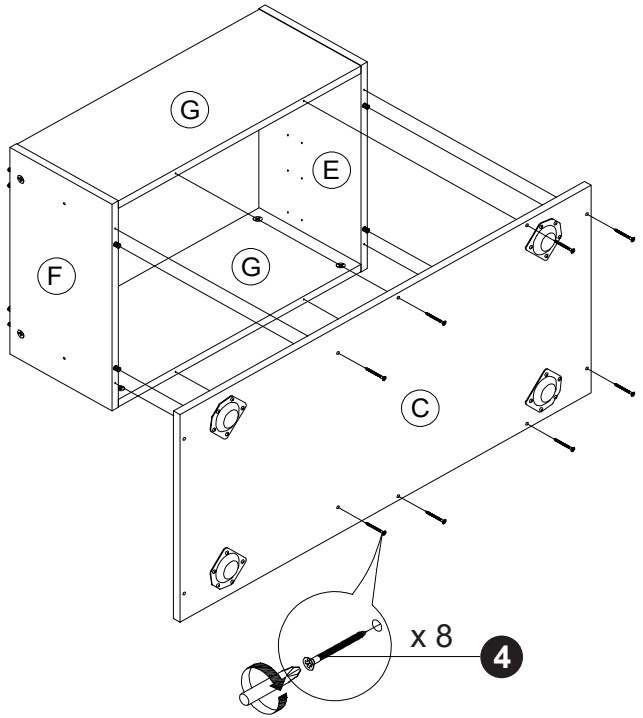

6

