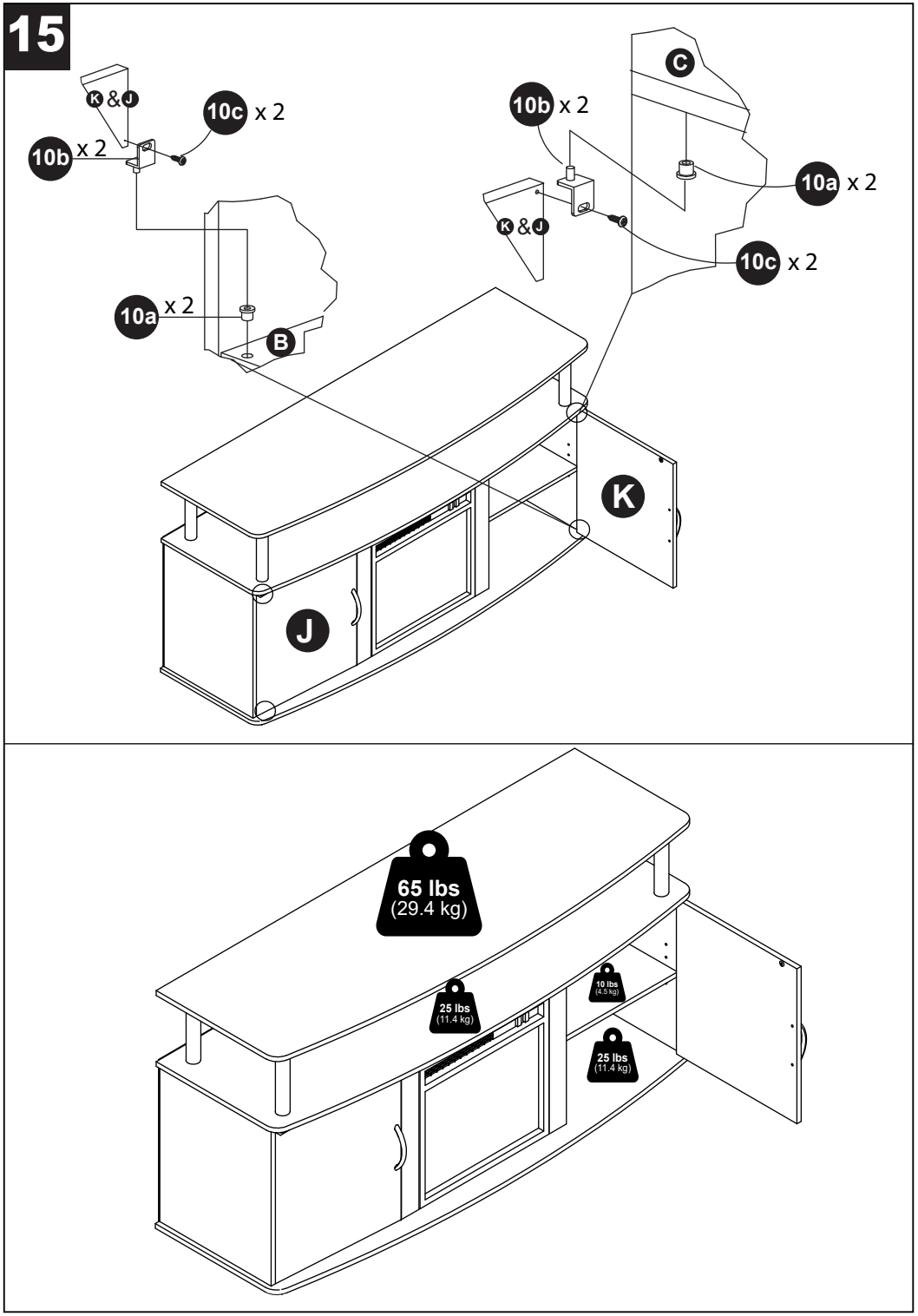

Furinno®

Fits Space, Fits Budget

01:00

x 2

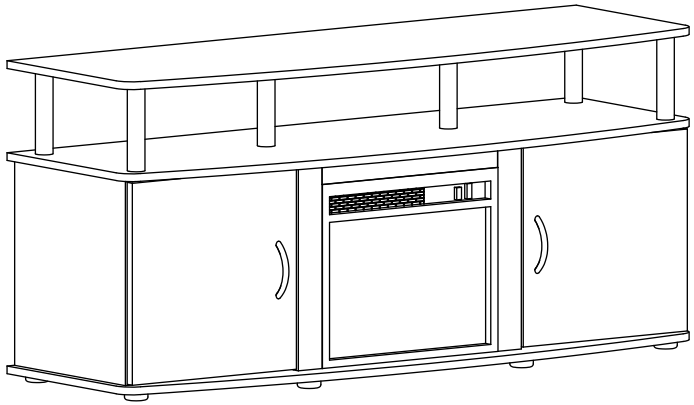

MODEL: 23158

support@furinno.com

www.furinno.com

2315820231122

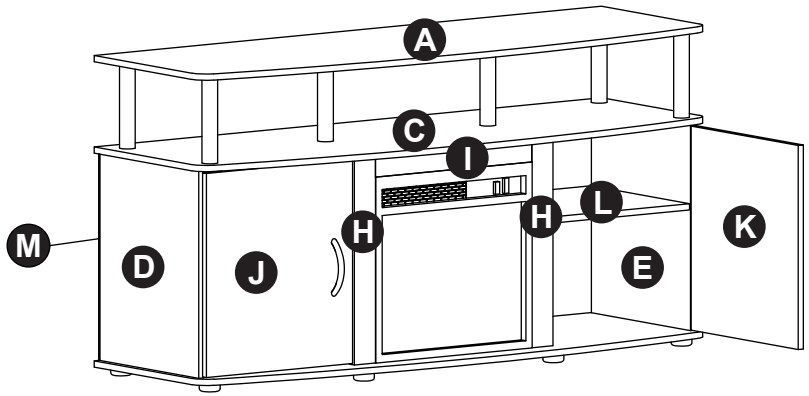

1 x 12 M8 x 24mm	2 x 12 12mm	3 x 16 M6 x 20mm	4 x 8 M5 x 40mm
5 x 28 2.5 x 18mm	6 x 9 M4 x 11mm	7 x 2 17 X 22mm	8 x 1 1.2 x 24 x 90mm
9 x 8 5 x 6 x 16mm	10 x 4 a b c	11 x 2	12 x 2 M5 x 6mm
13 x 2 131 x 26mm	14 x 4 M3.6 x 19mm	15 x 6 Ø34 x 8mm	16 x 6 Ø30 x 162mm
17 x 7 Ø40 x 14mm	18 x 1	19 x 6 34 x 2mm	20 x 1

13

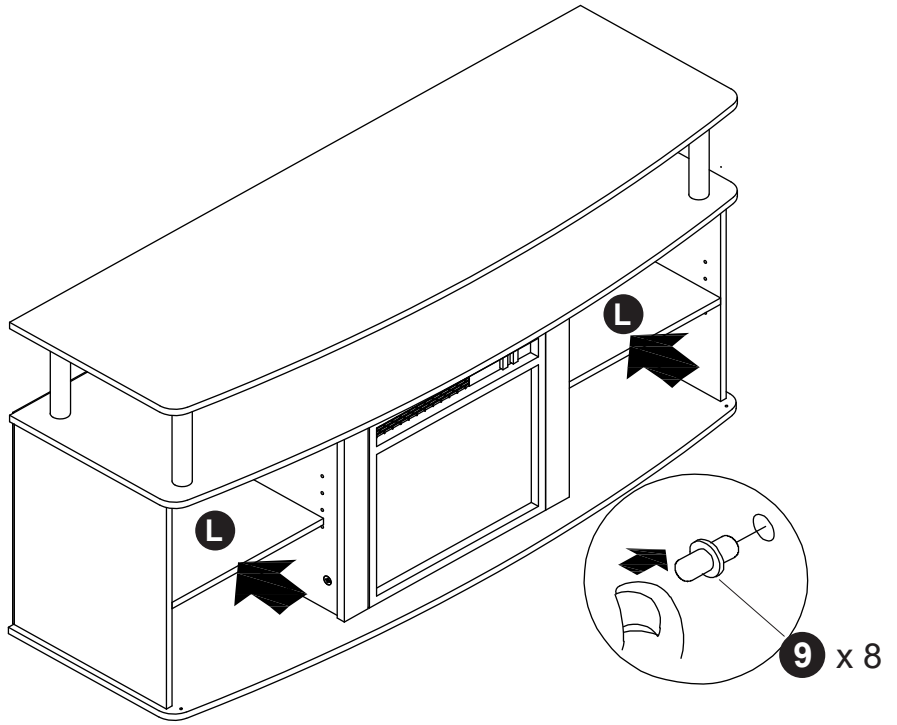

14

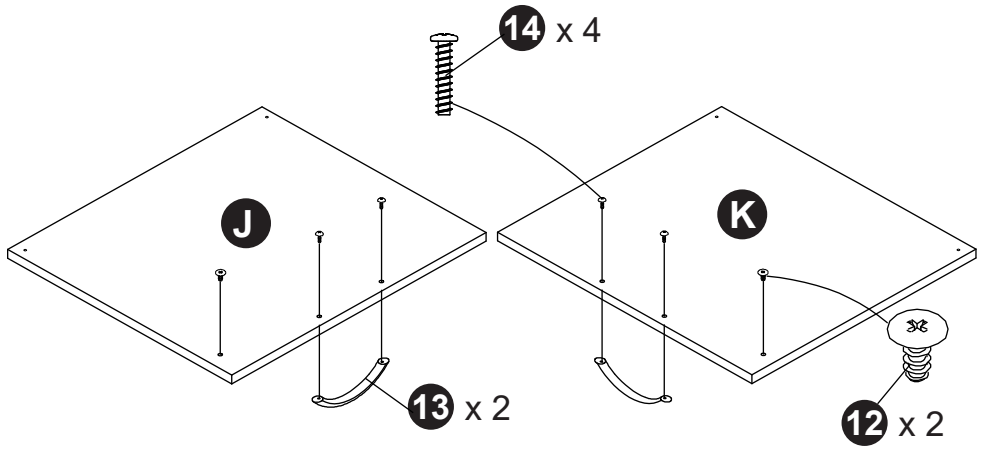

11

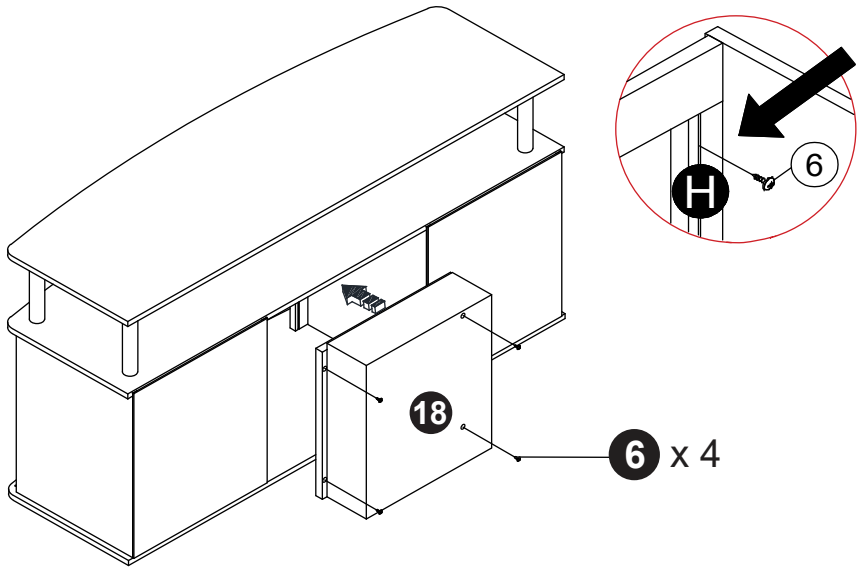

12

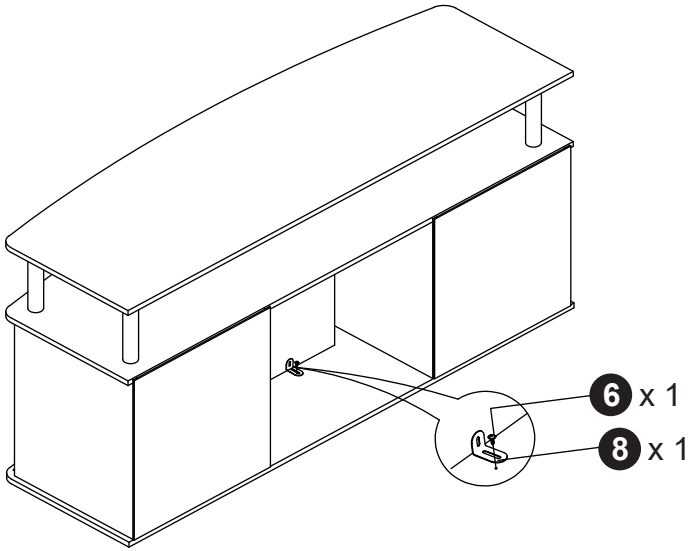

1

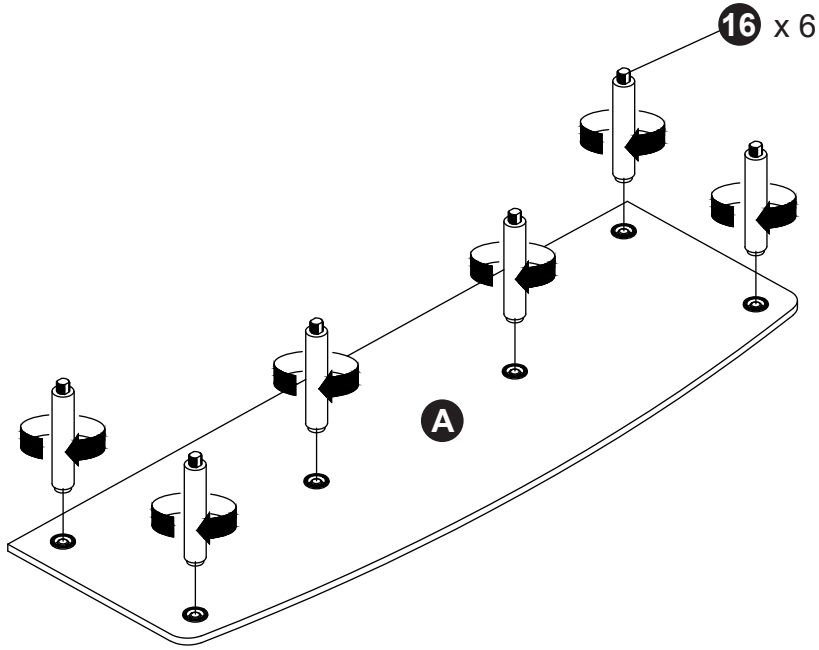

2

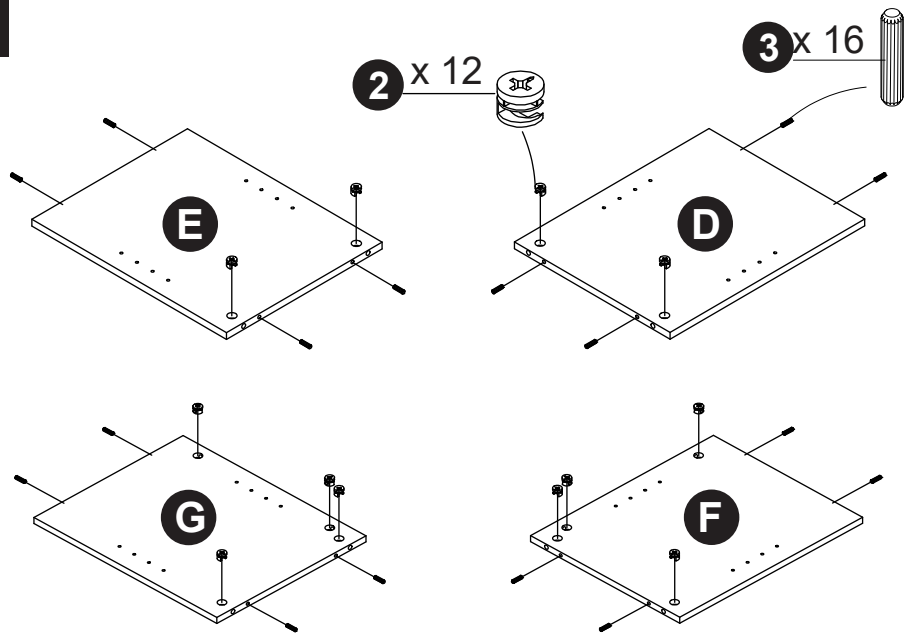

3

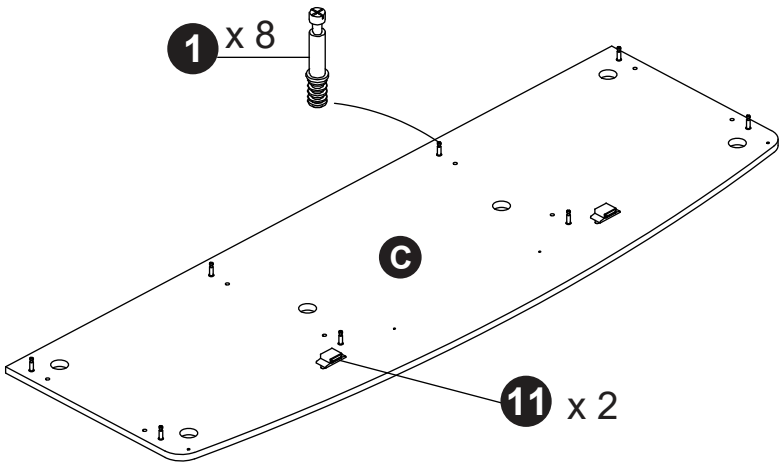

4

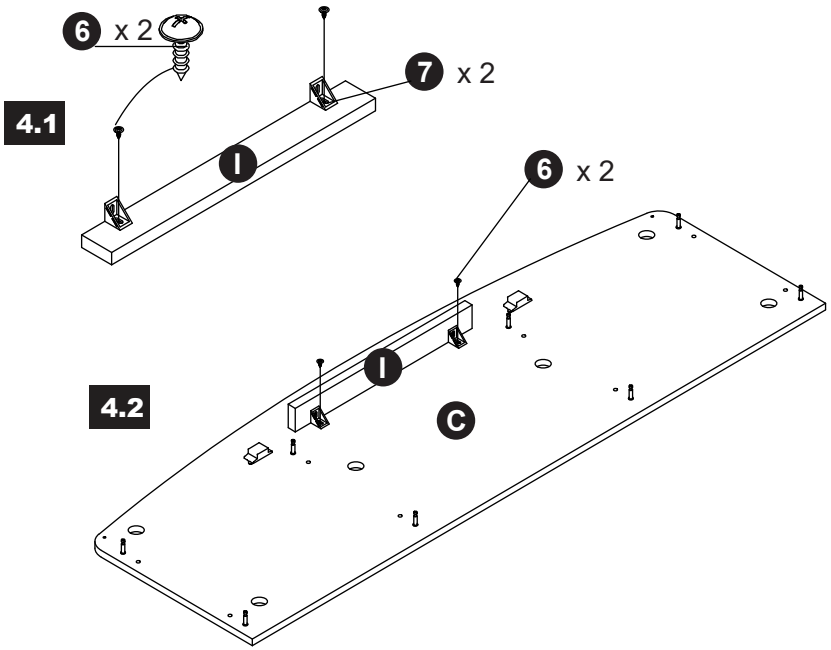

9

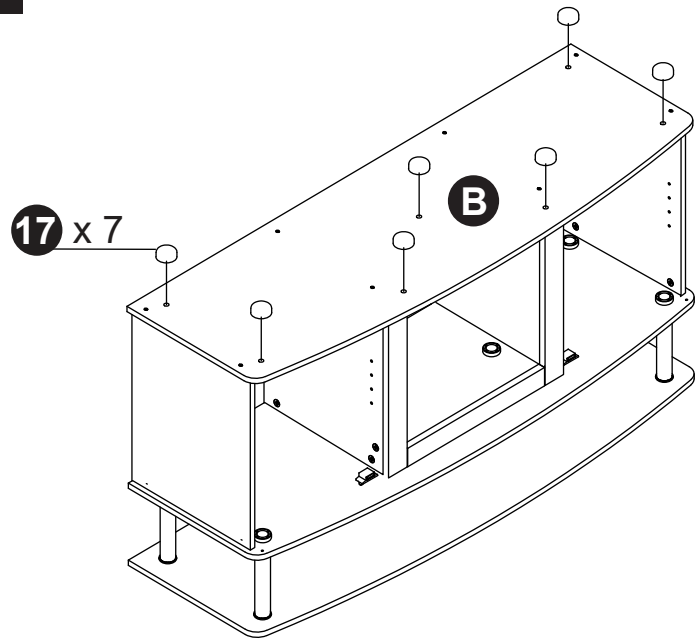

10

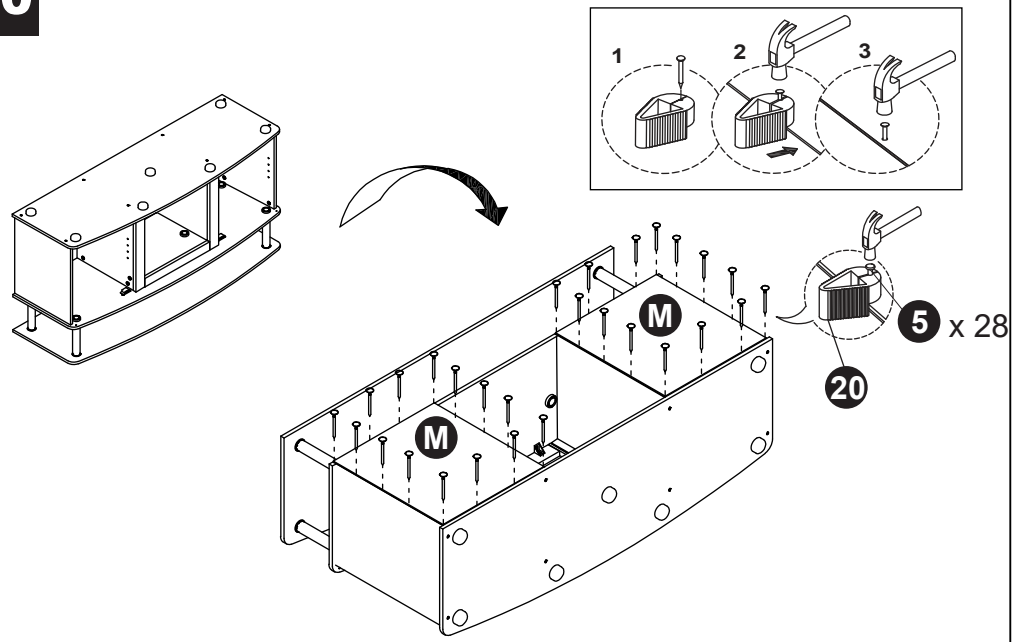

8

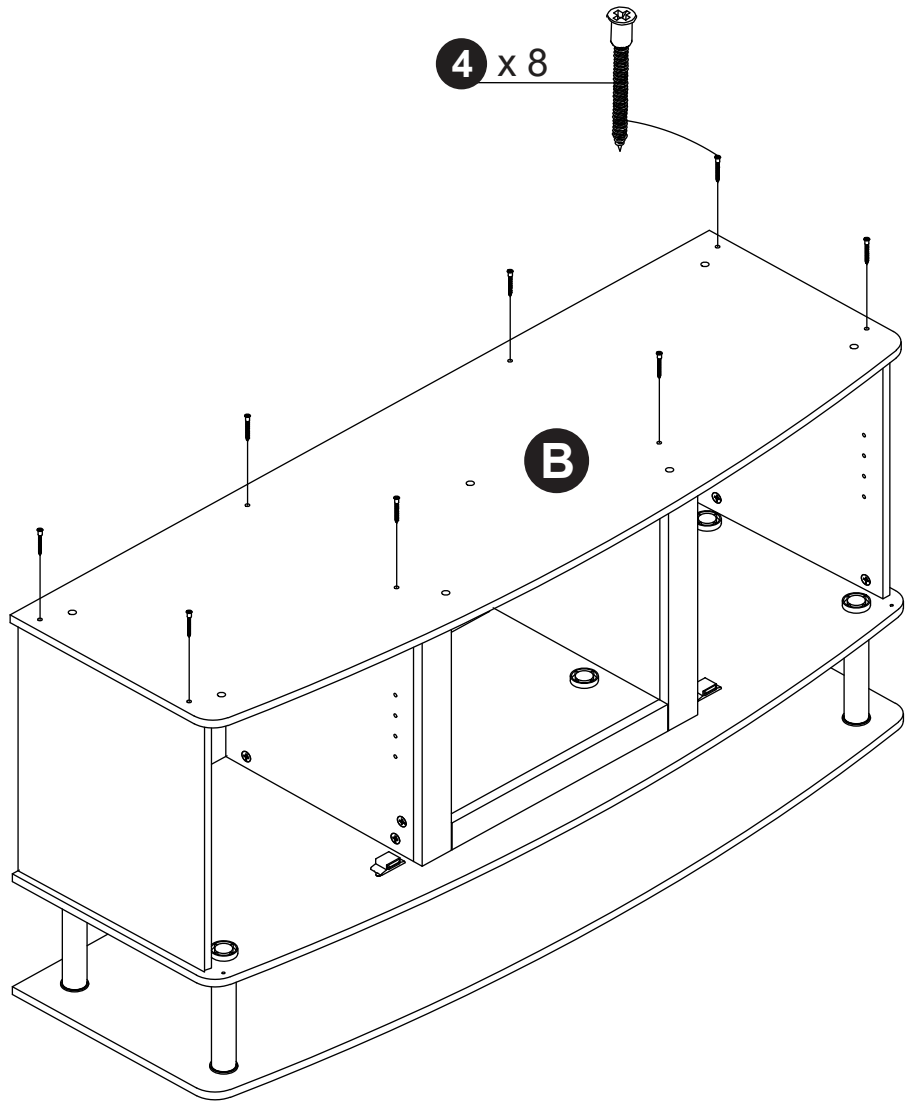

5

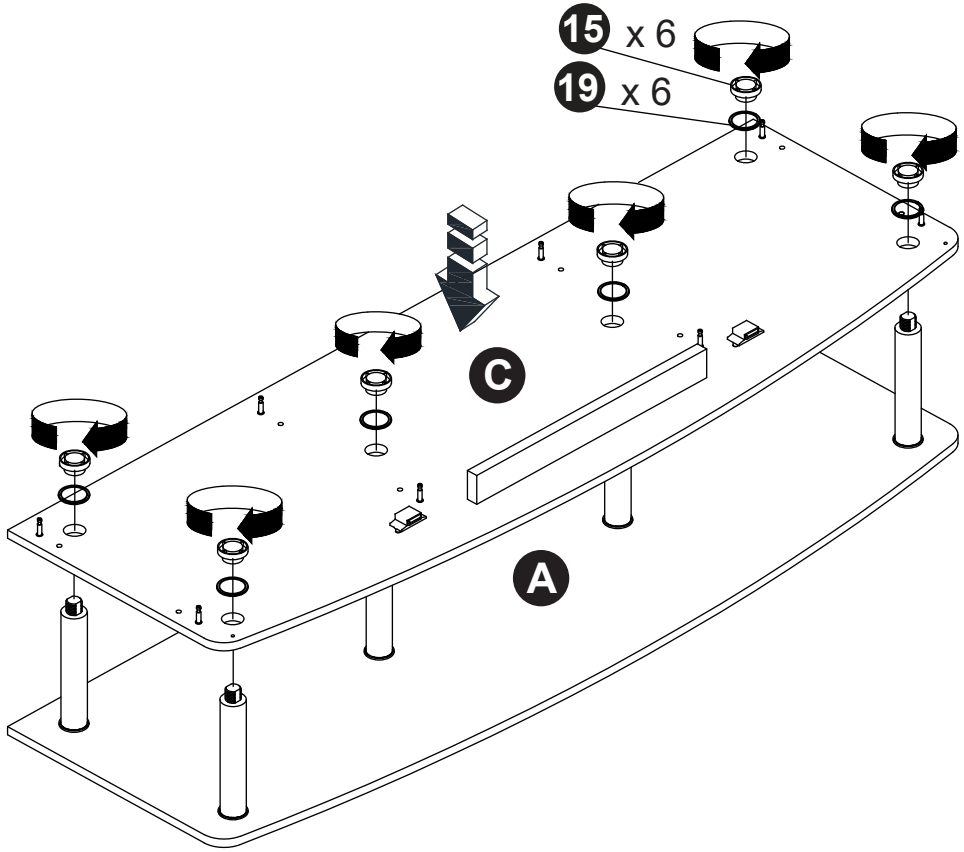

6

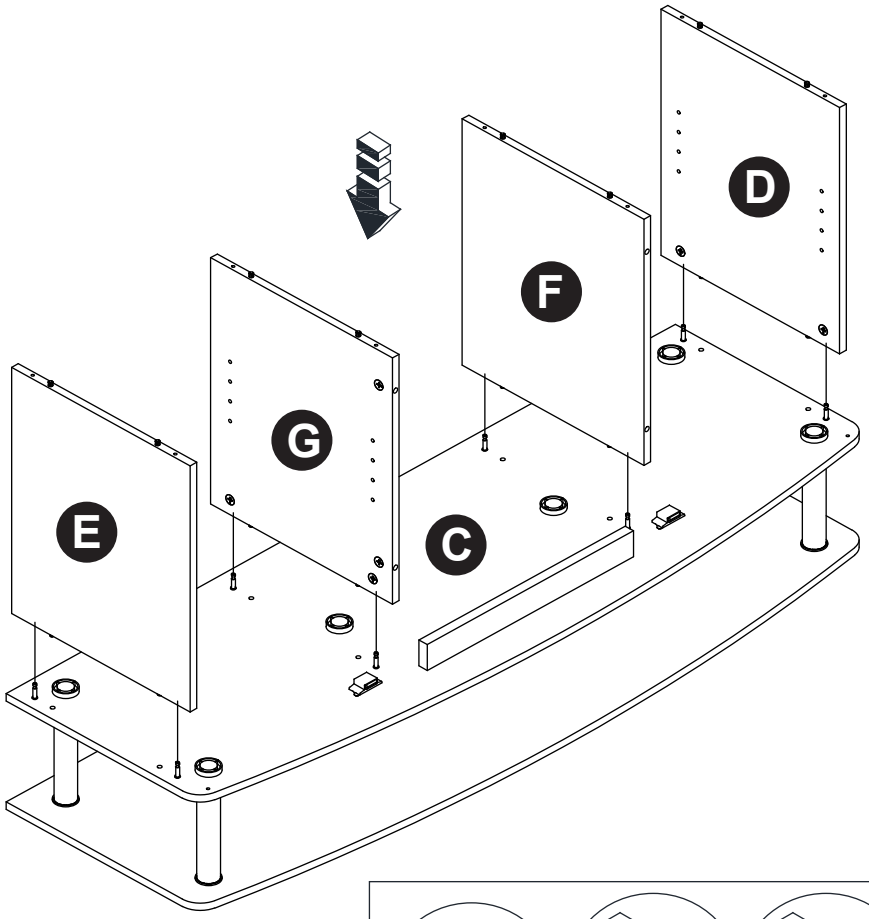

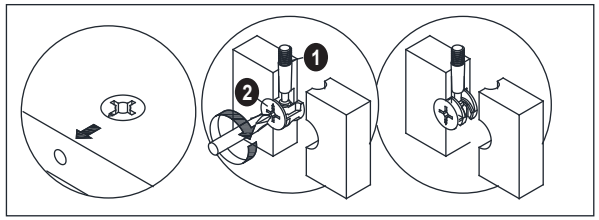

7

9.1

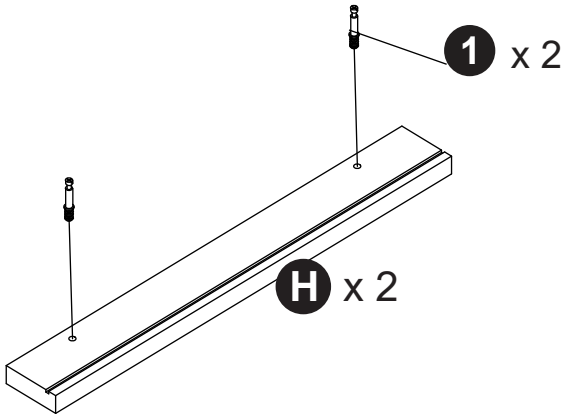

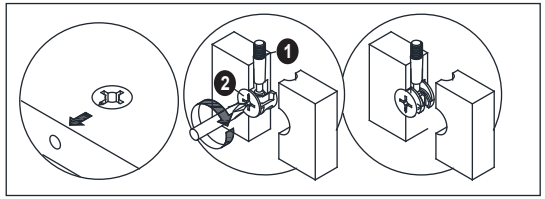

9.2

