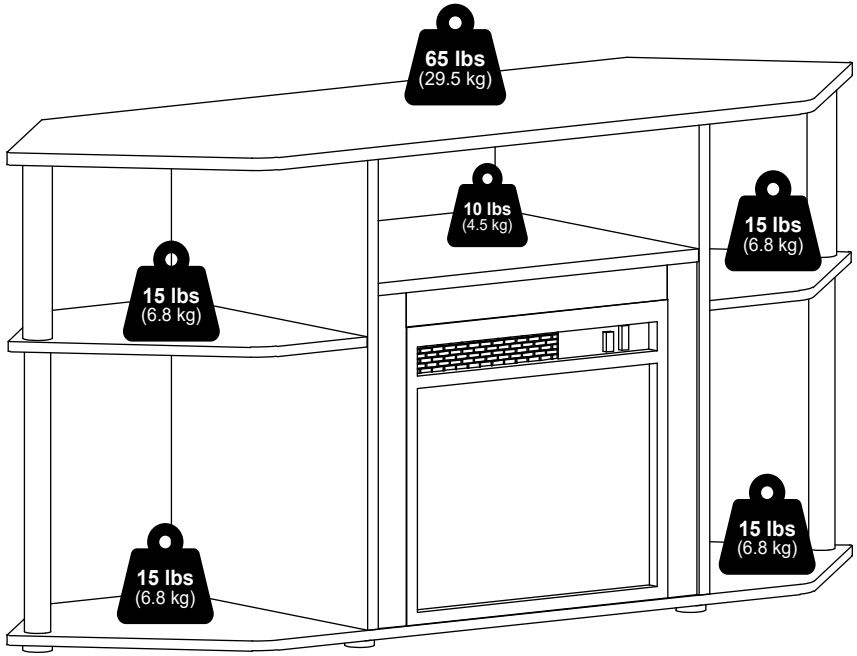

Furinno®

Fits Space, Fits Budget





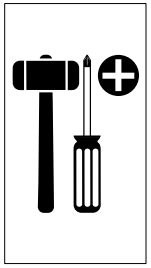

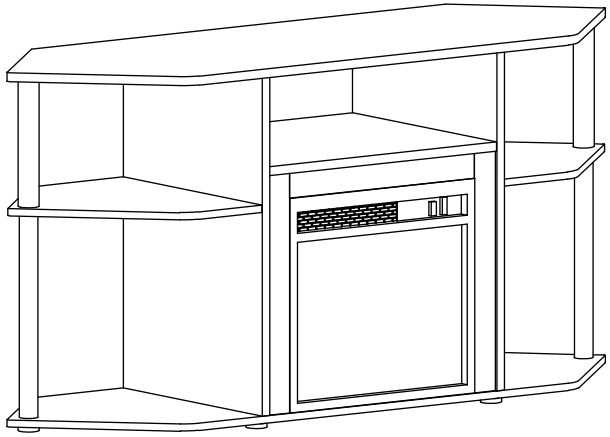

MODEL: 23161

support@furinno.com

www.furinno.com

2316120230904

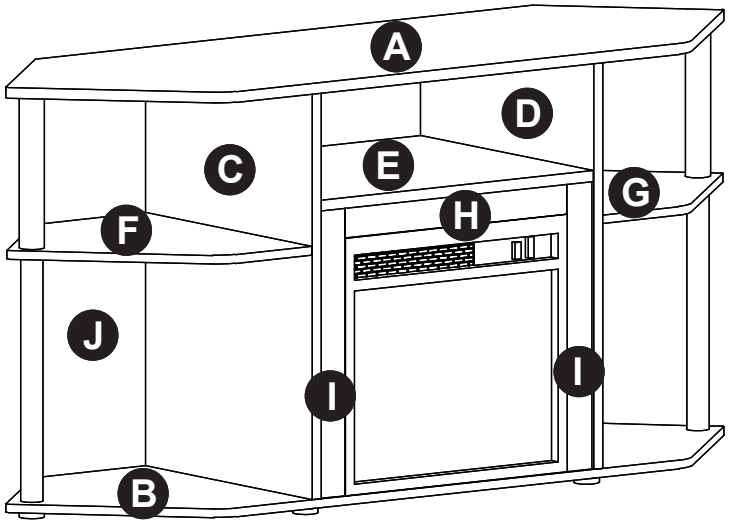

1 x 6 M6 x 31mm	2 x 6 15mm	3 x 24 M6 x 20mm	4 x 20 M5 x 40mm
5 x 4 M4 x 32mm	6 x 9 M4 x 11mm	7 x 2 17 X 22mm	8 x 1 1.2 x 24 x 90mm
9 x 1	10 x 6 Ø34 x 8mm	11 x 6 34 x 2mm	12 x 2 Ø30 x 340mm
13 x 2 Ø34 x 210mm			

12

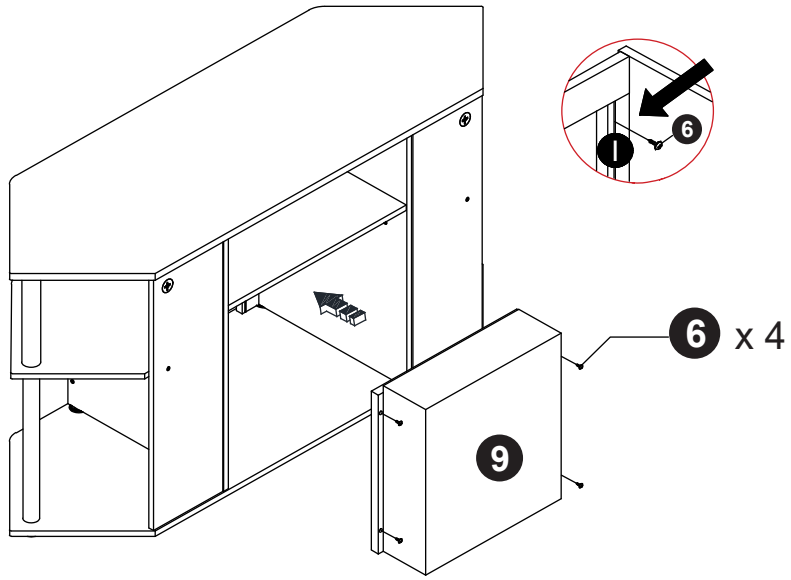

13

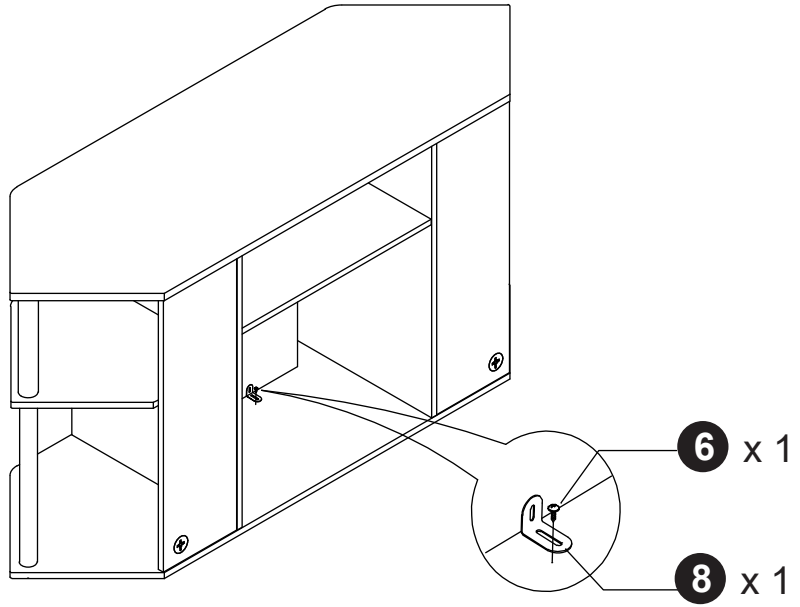

10

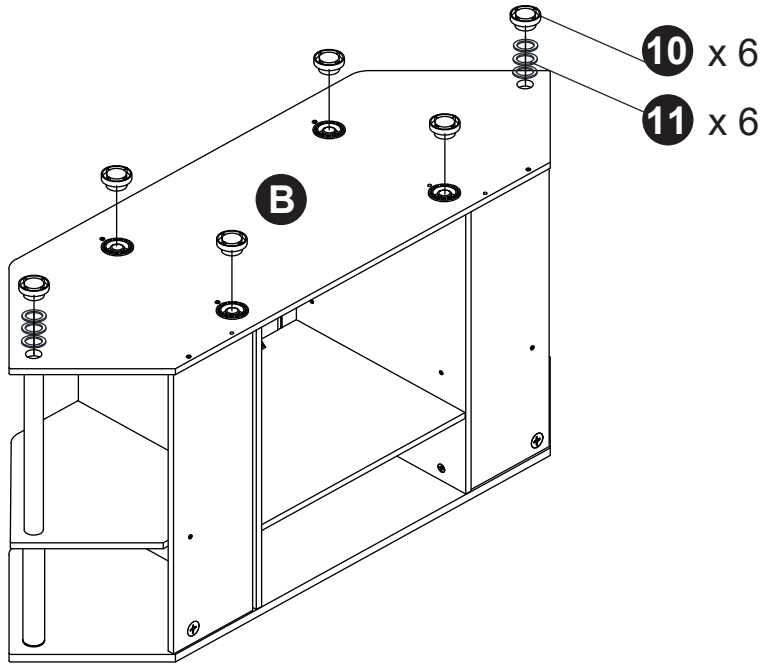

11

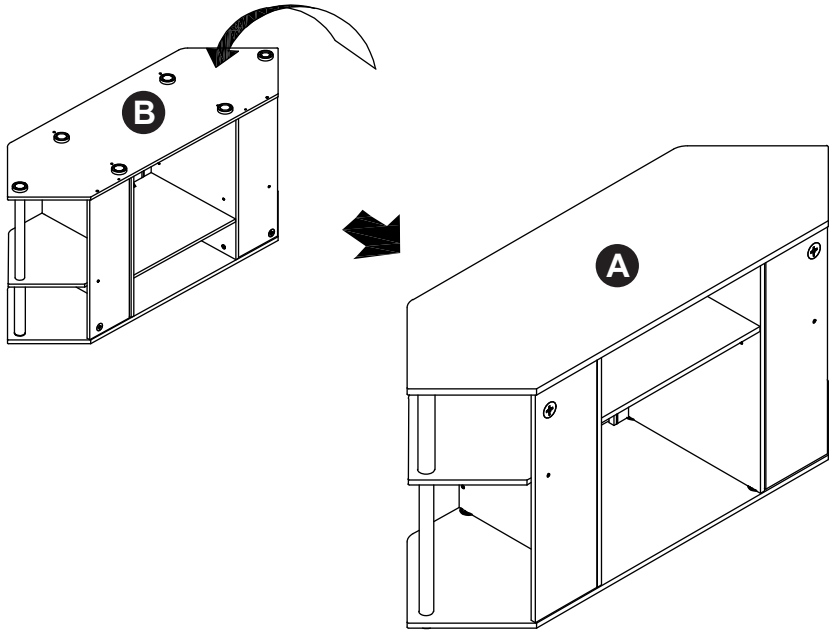

1

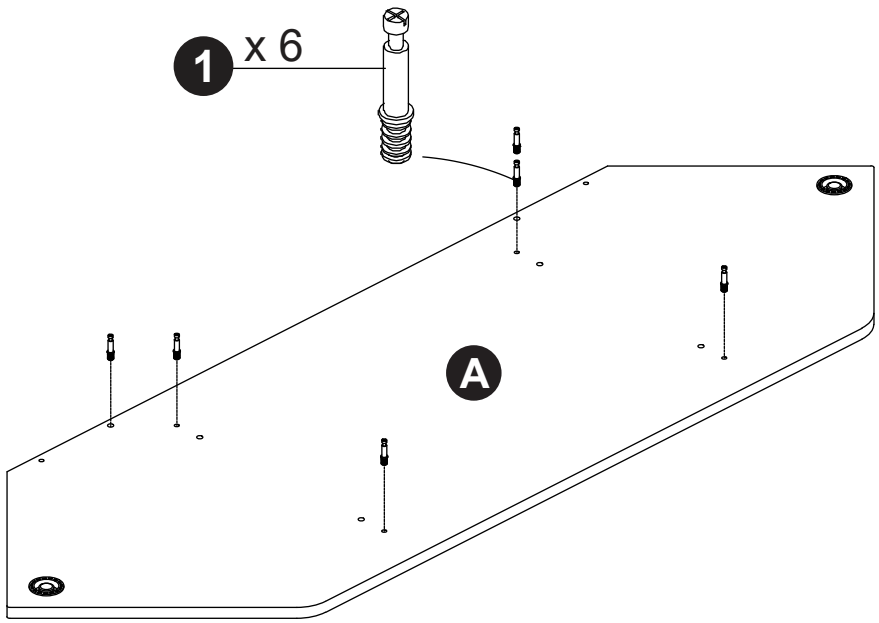

2

2.1

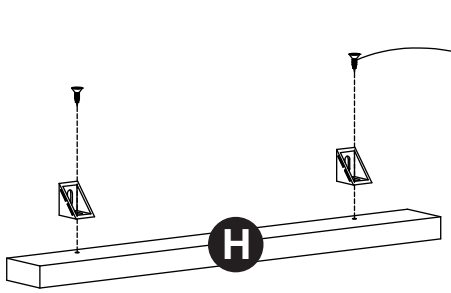

2.2

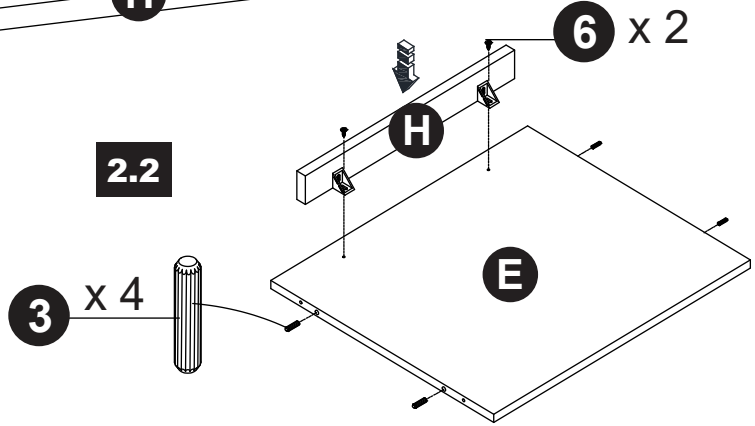

3

3.1

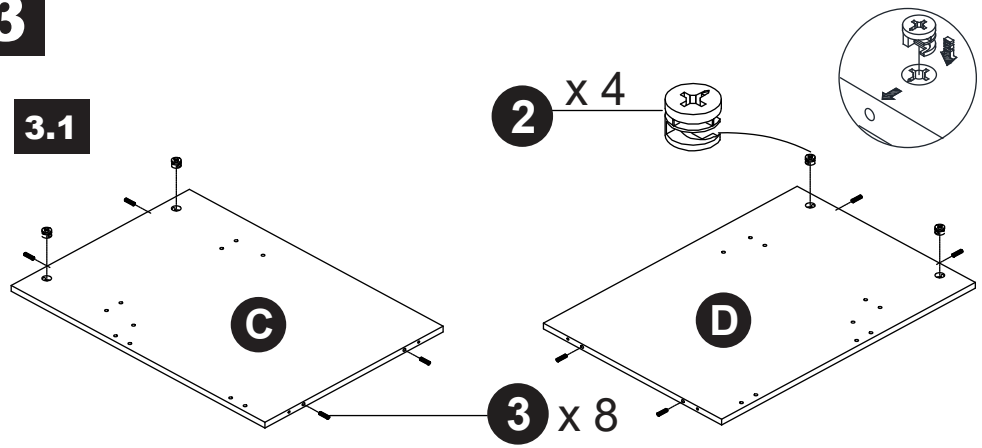

3.2

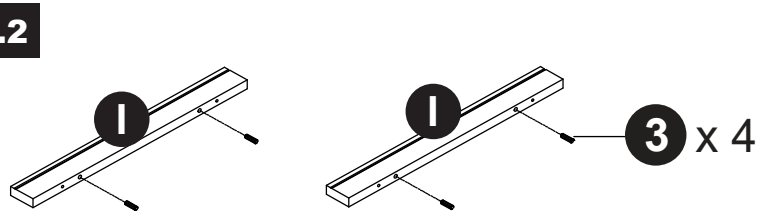

3.3

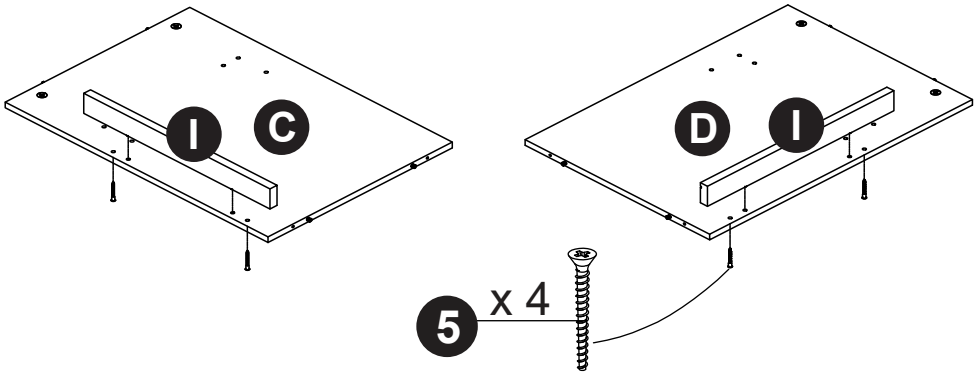

8

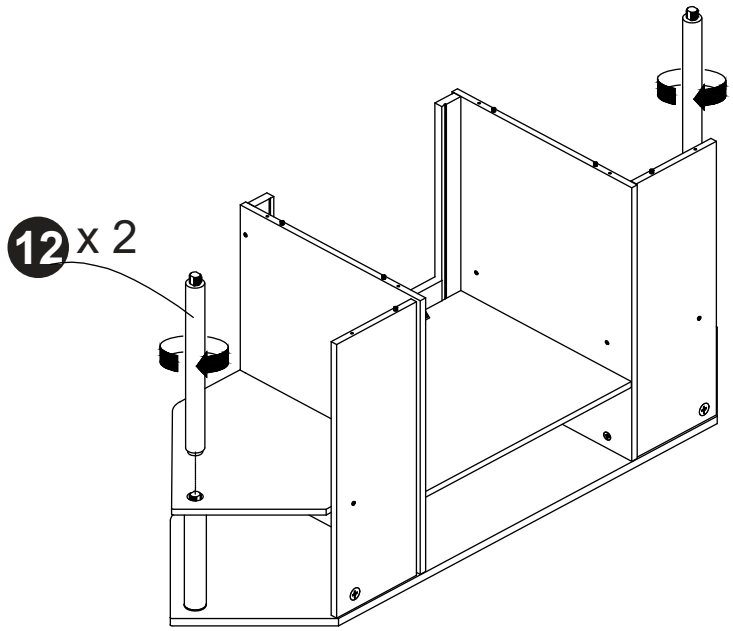

9

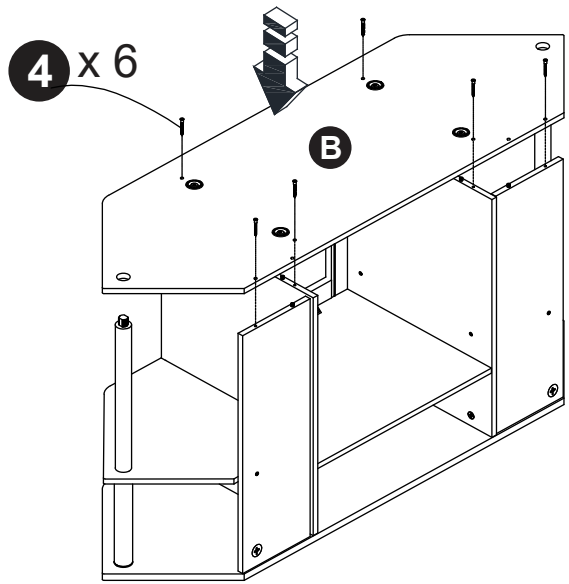

7

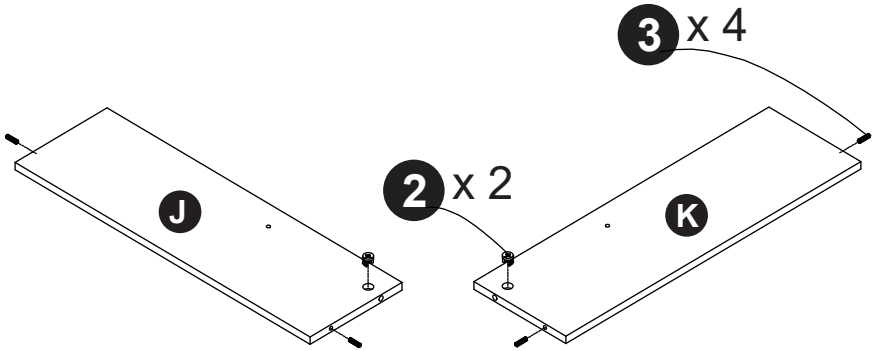

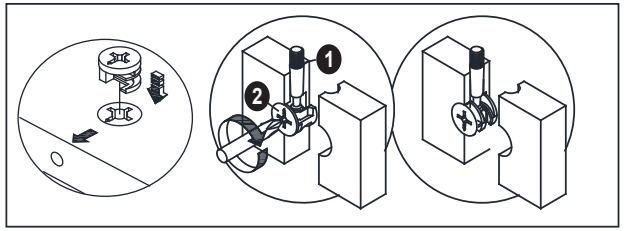

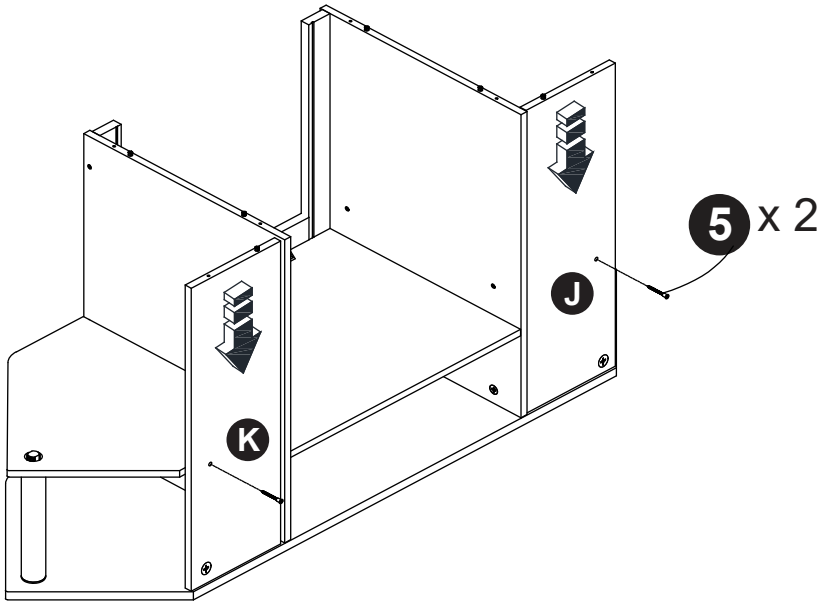

4

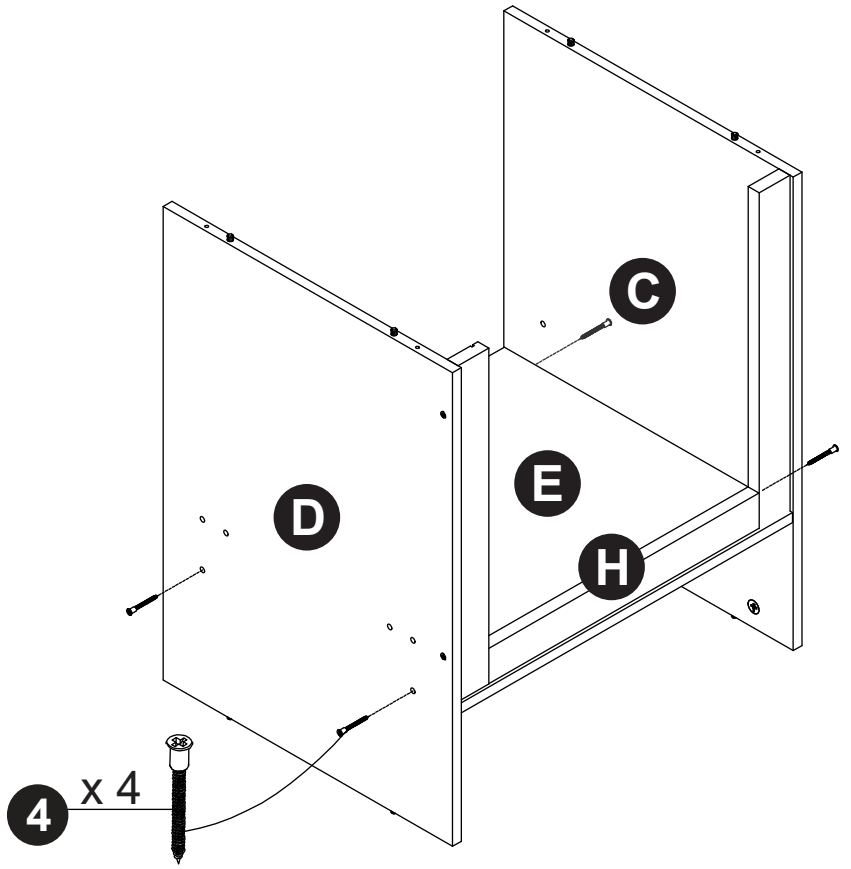

5

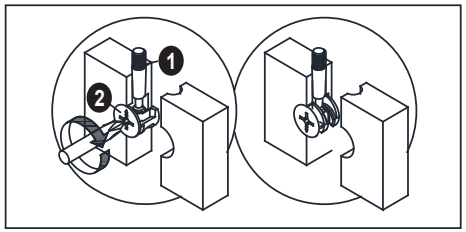

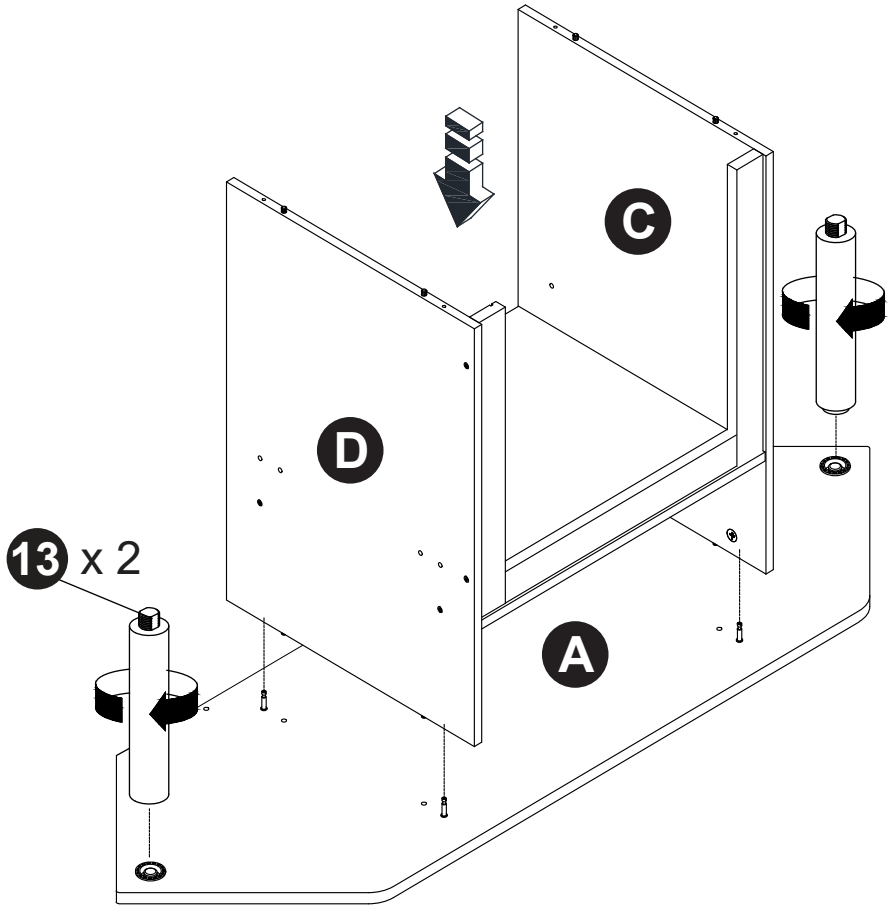

6

6.1

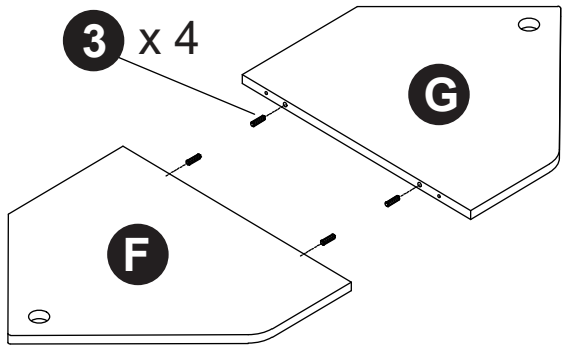

6.2

