11

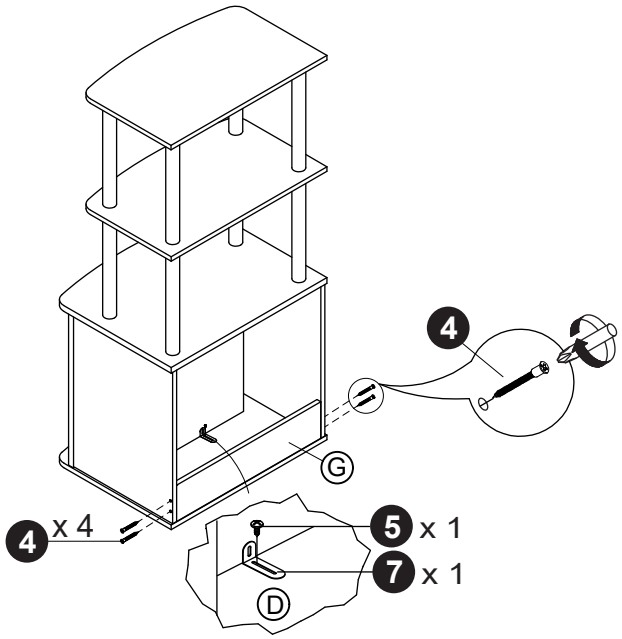

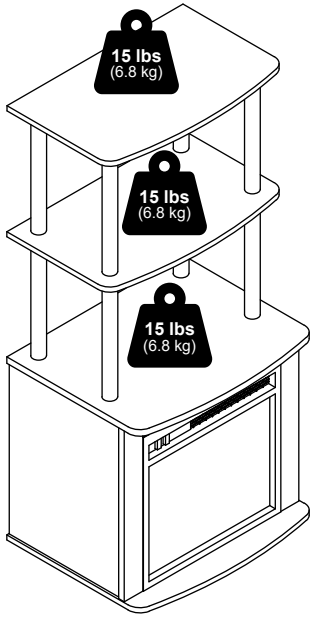

Furinno®

Fits Space, Fits Budget



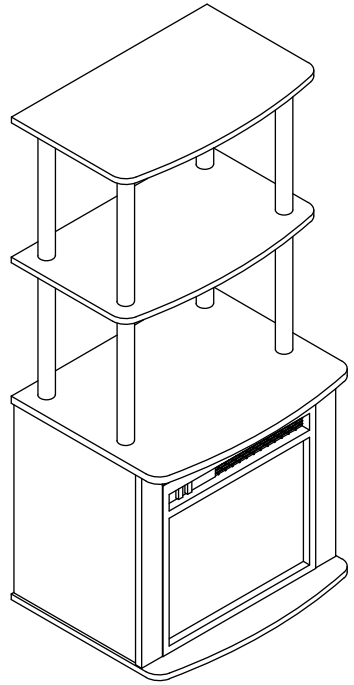

MODEL: 23162

support@furinno.com

www.furinno.com

2316220230902

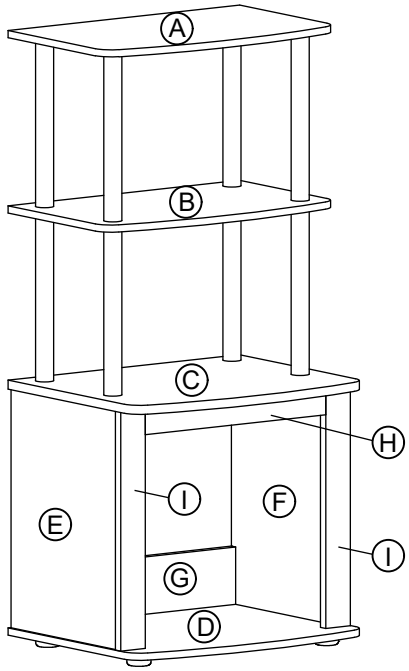

1 x 8 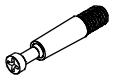 M6 x 31mm	2 x 8  15mm	3 x 8  M6 x 20mm	4 x 8  M5 x 40mm
5 x 9  M4 x 11mm	6 x 2 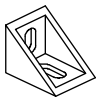 17 x 22mm	7 x 1 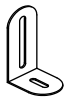 1.2 x 24 x 90mm	8 x 1 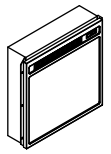
9 x 8 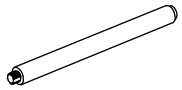 30 x 280mm	10 x 4  Ø34 x 8mm	11 x 4  34 x 2mm	12 x 4  Ø40 x 14mm

9

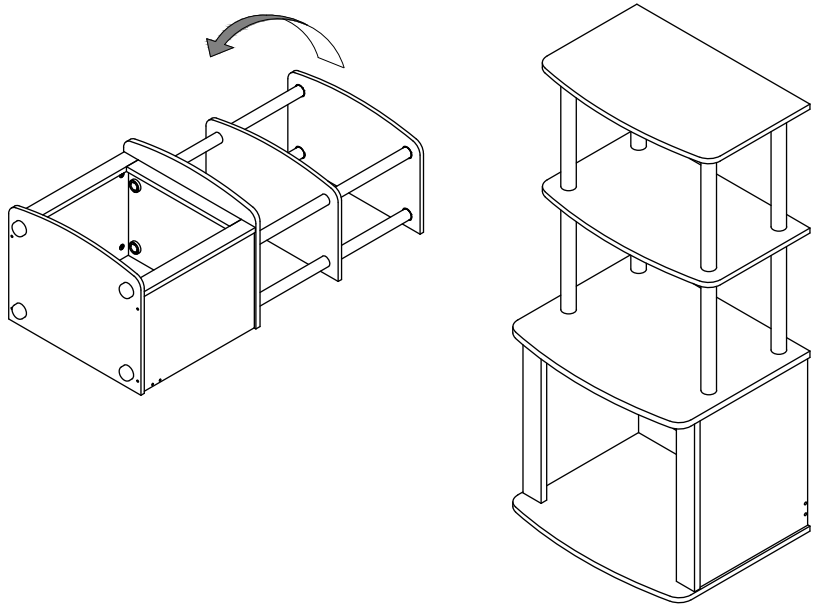

10

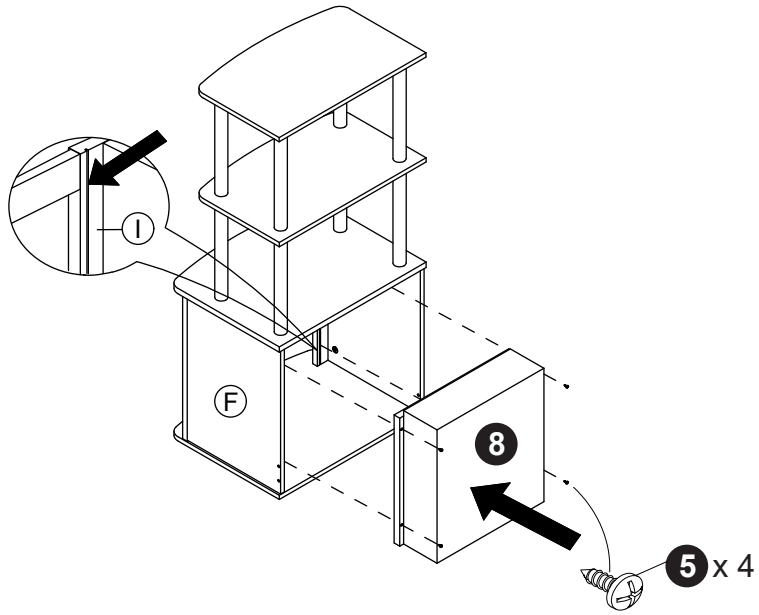

7

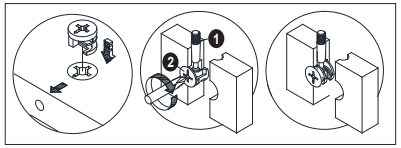

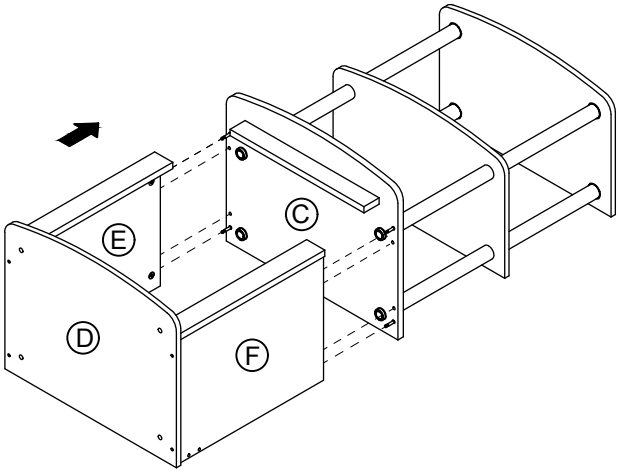

8

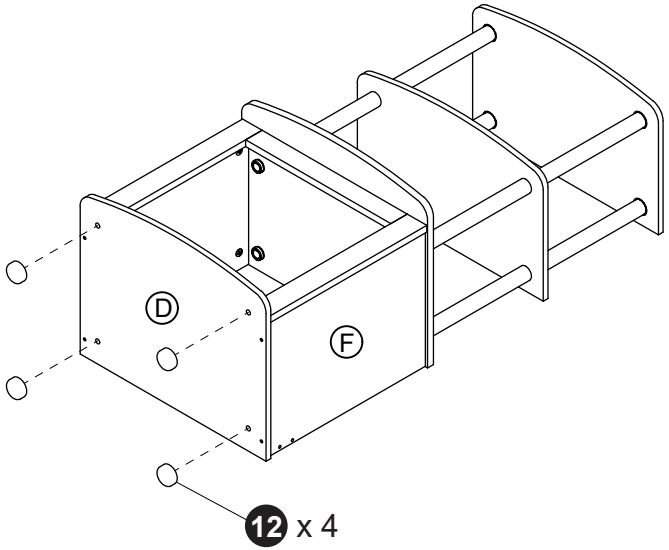

1

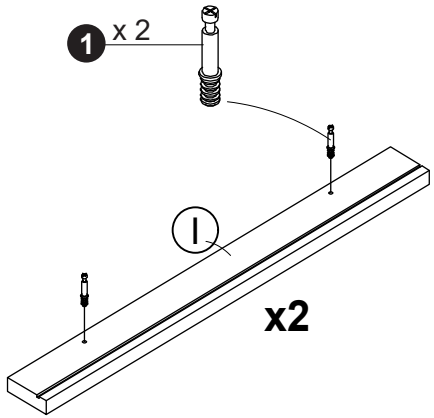

2

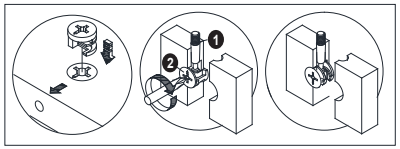

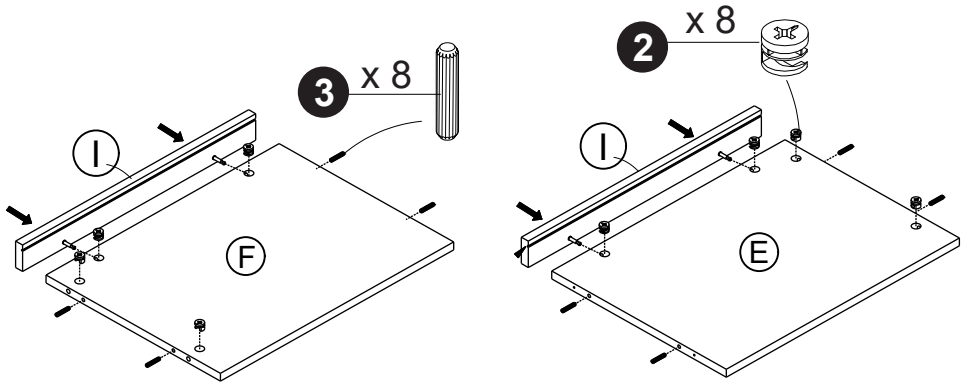

3

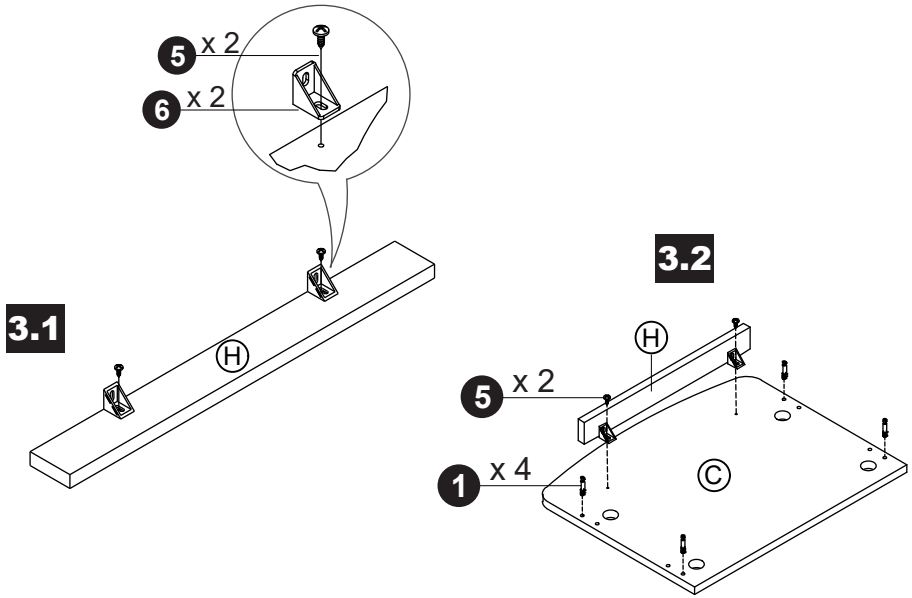

4

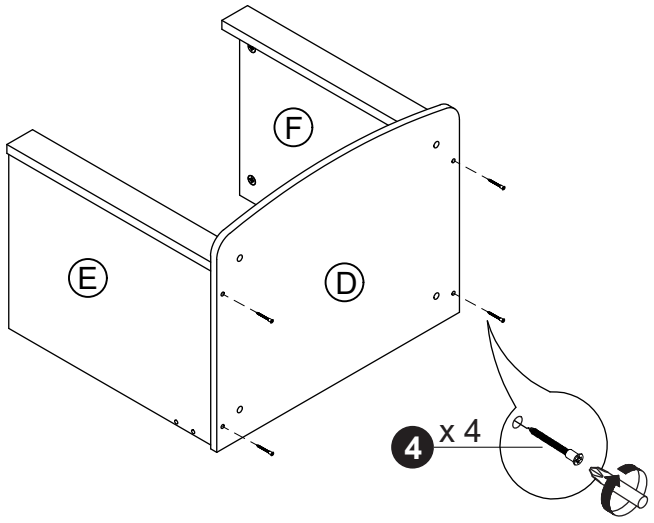

5

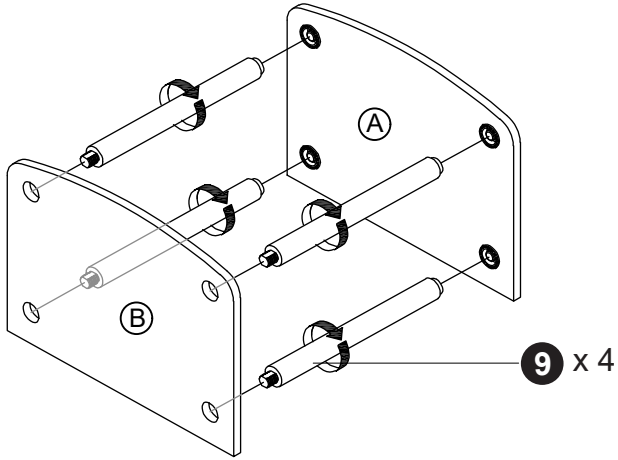

6

