7

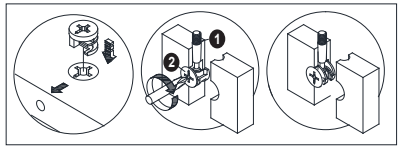

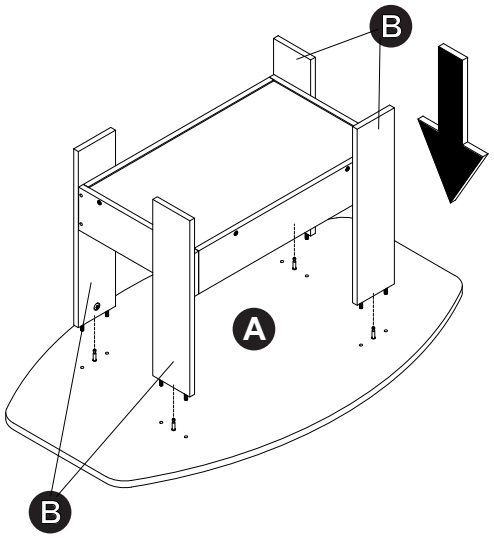

8

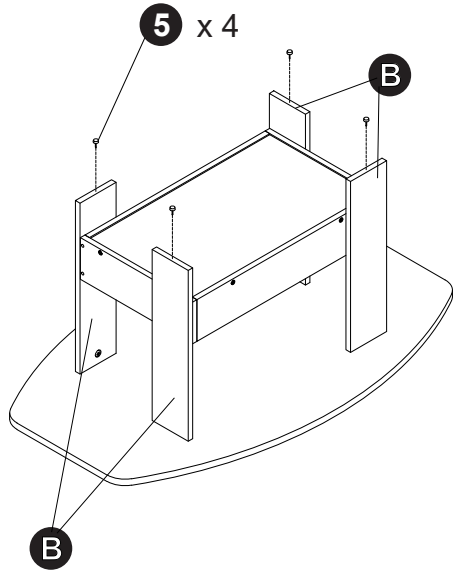

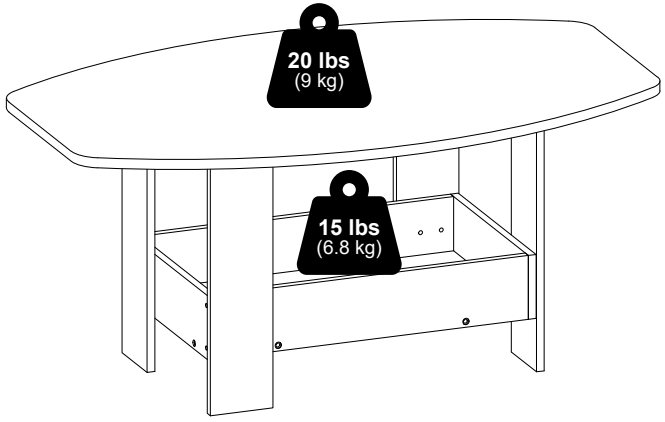

Furinno®

Fits Space, Fits Budget





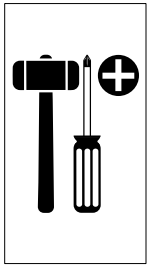

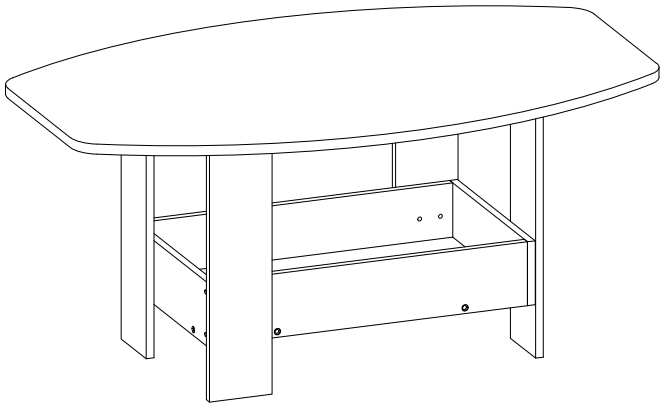

MODEL: 23185

support@furinno.com

www.furinno.com

2318520231009

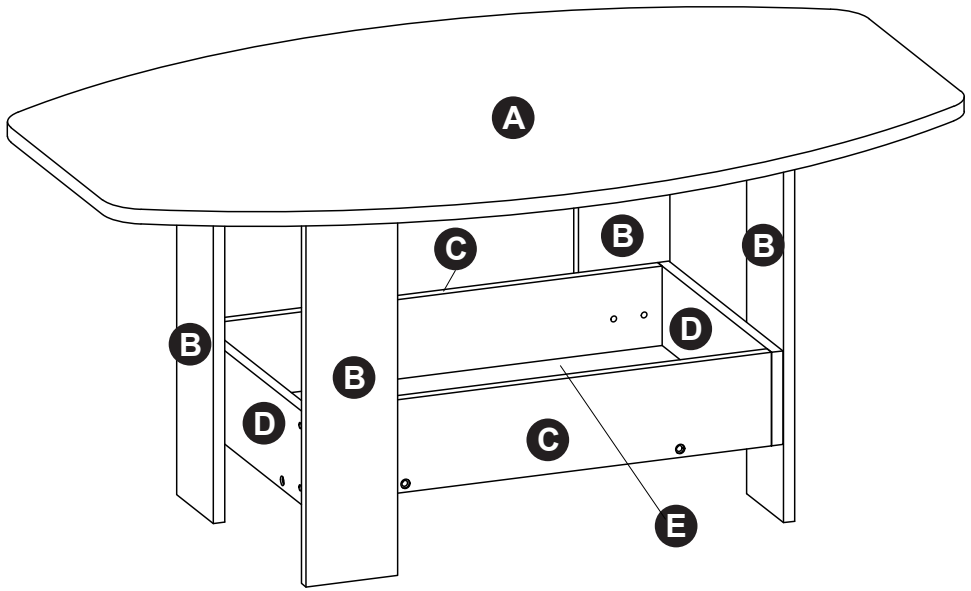

1 x 4 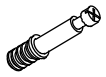 M6 x 31mm	2 x 4  15mm	3 x 8 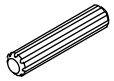 M6 x 20mm	4 x 16  M5 x 40mm
5 x 4  10mm	6 x 8  8 x 3/4”		

1

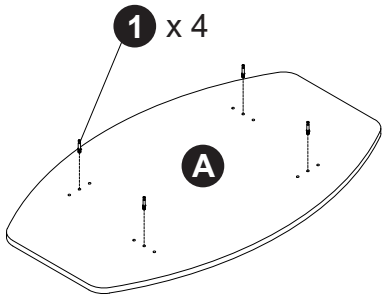

2

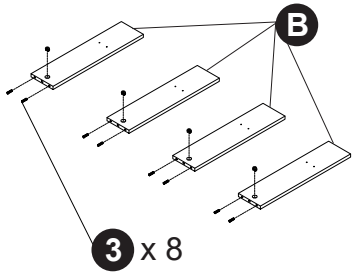

3

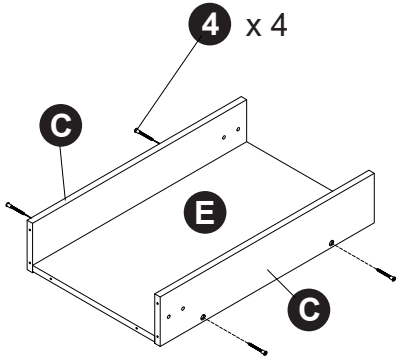

4

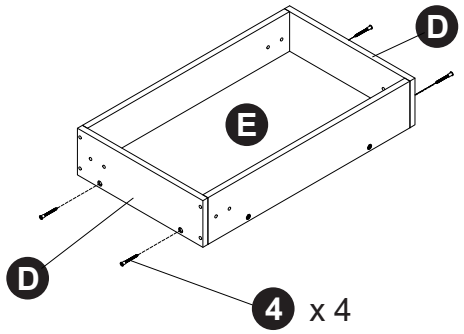

5

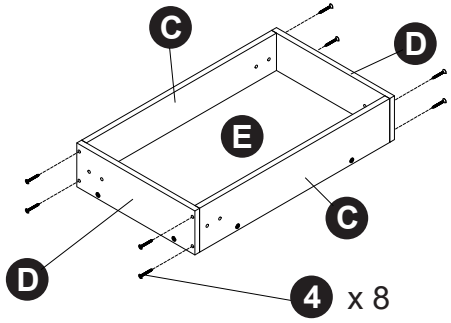

6

