

Furinno®

Fits Space, Fits Budget



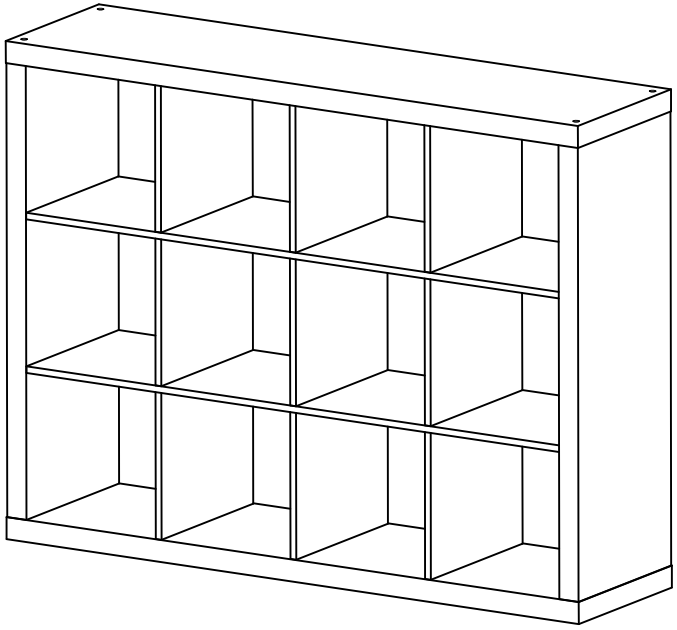

MODEL: 23207

support@furinno.com

www.furinno.com

2320720241202

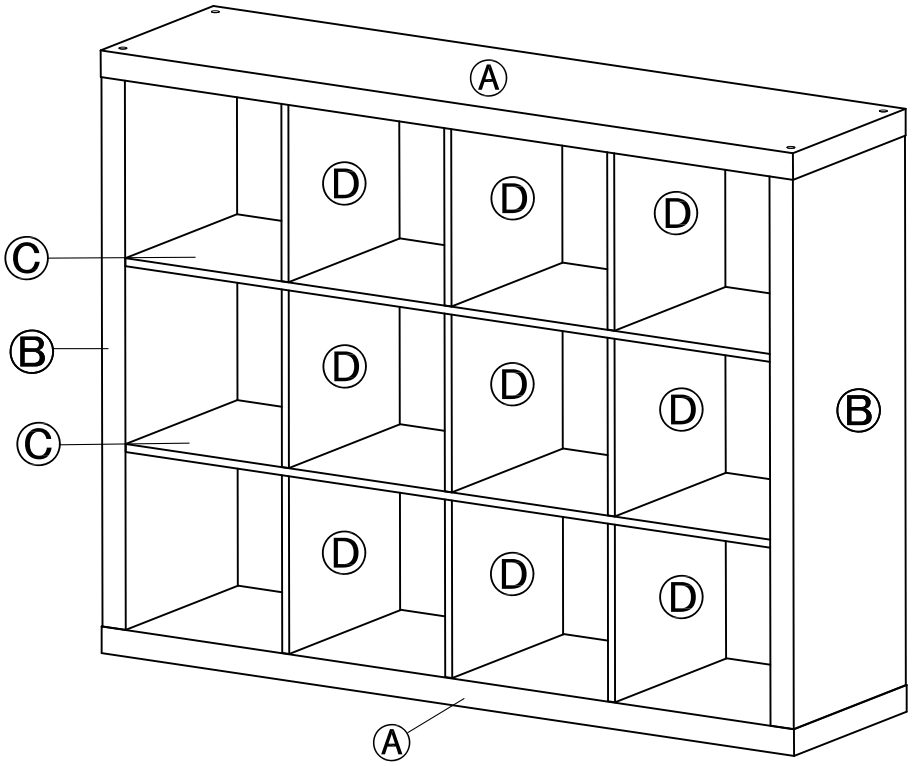

1 x 8  M7 x 75mm	2 x 8 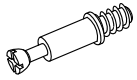 11/12mm	3 x 8  8 x 20mm	4 x 24  M5 x 50mm
5 x 1 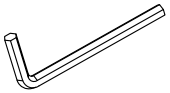 M4 x 30 x 70mm	6 x 8 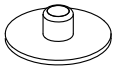 Ø14 x 3mm	7 x 1 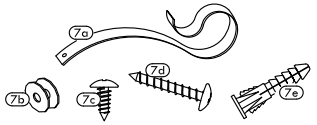	

7

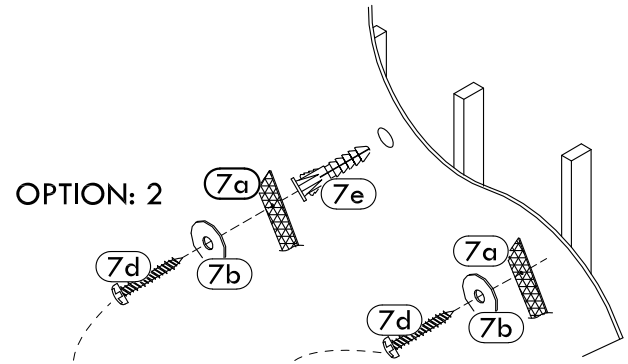

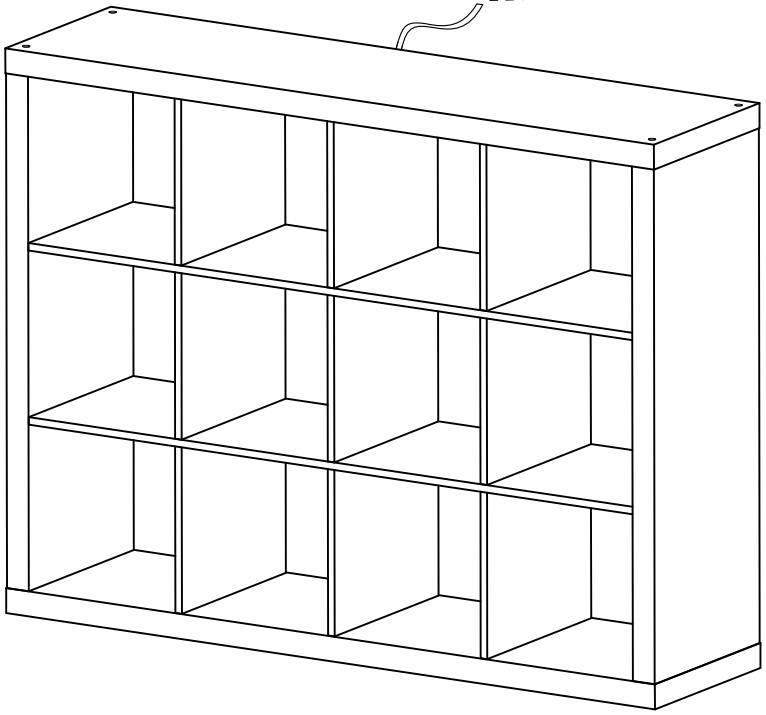

5

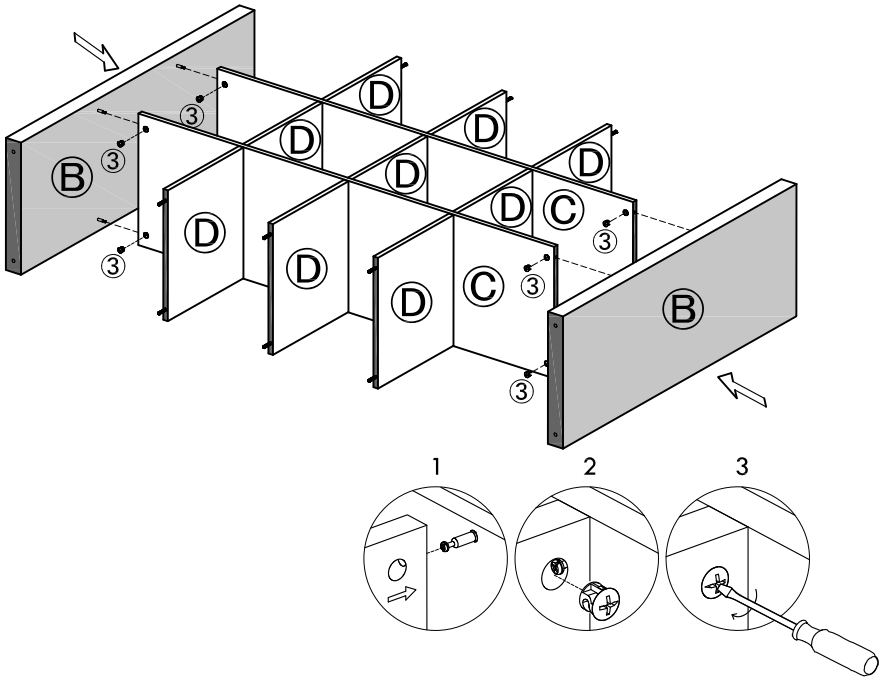

6

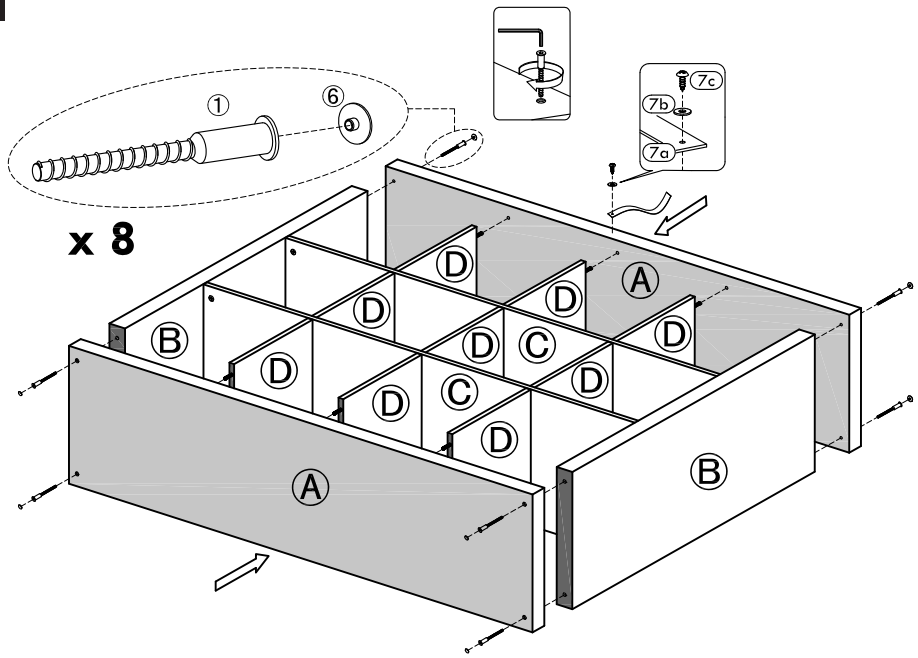

1

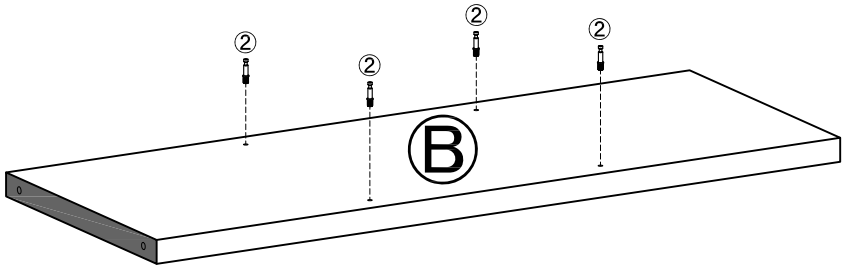

x 2

2

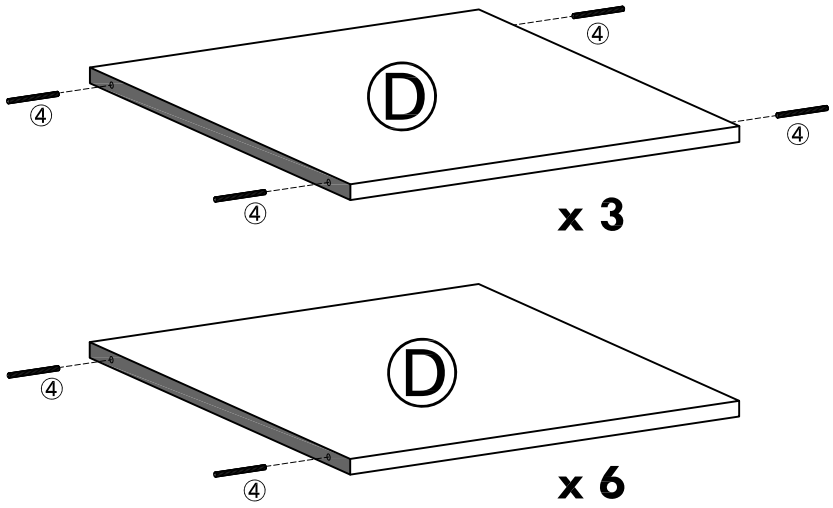

x 3

x 6

3

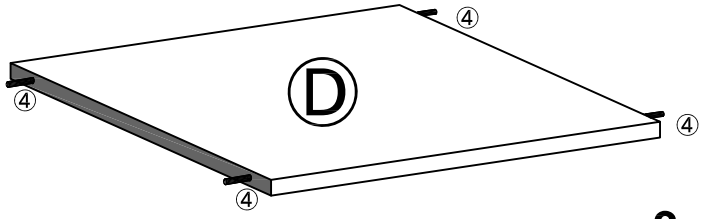

x 3

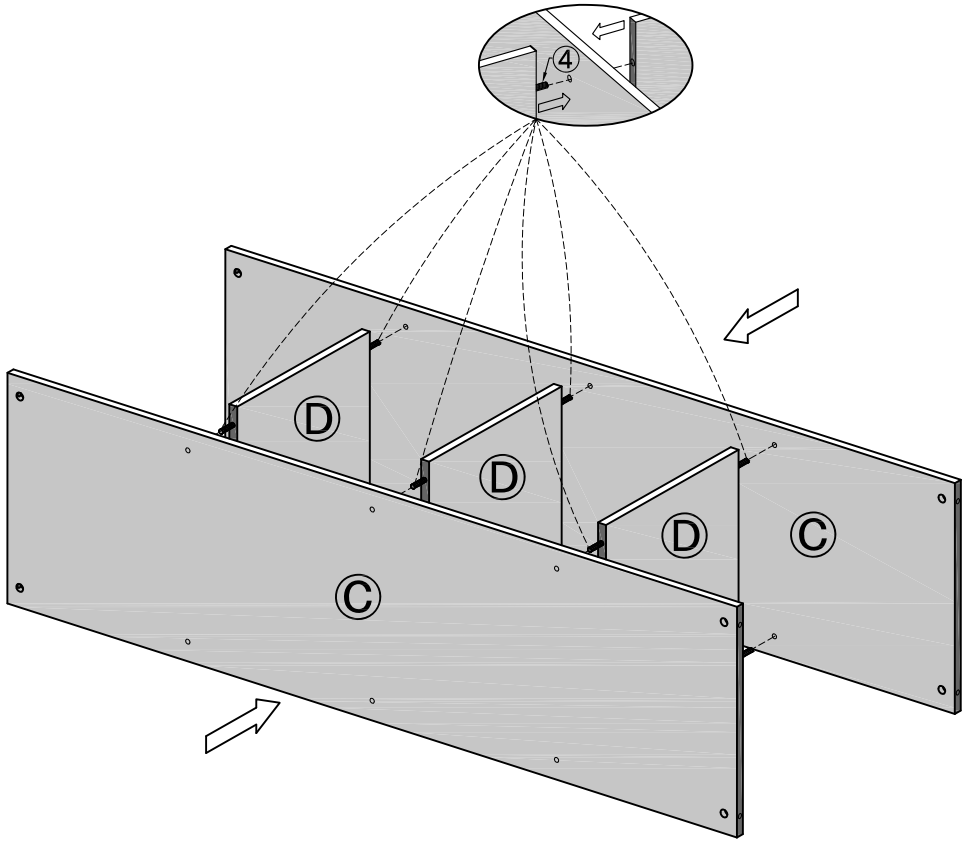

4

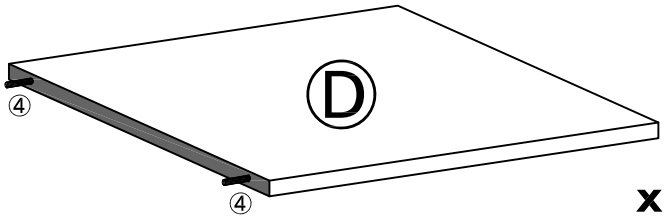

x 6

