8

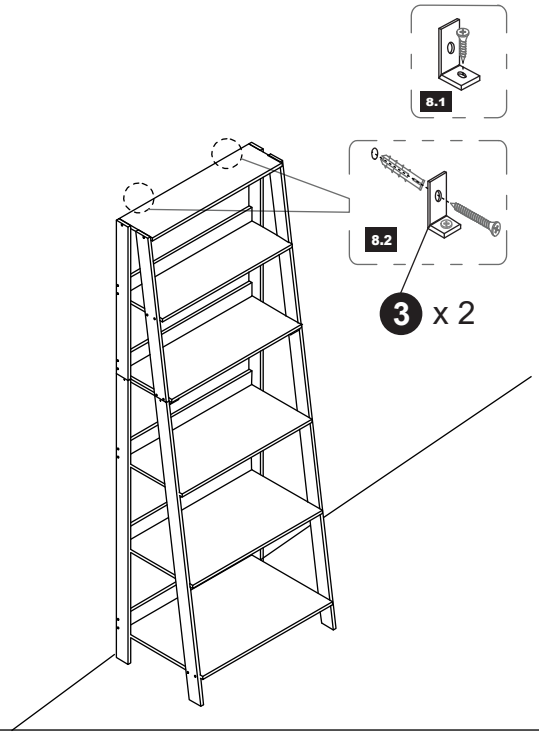

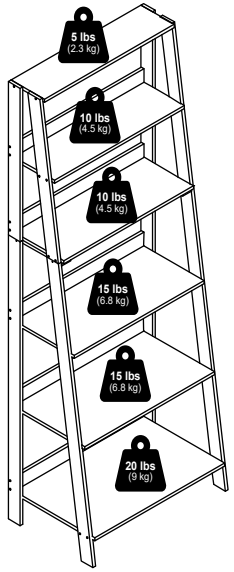

Furinno®

Fits Space, Fits Budget



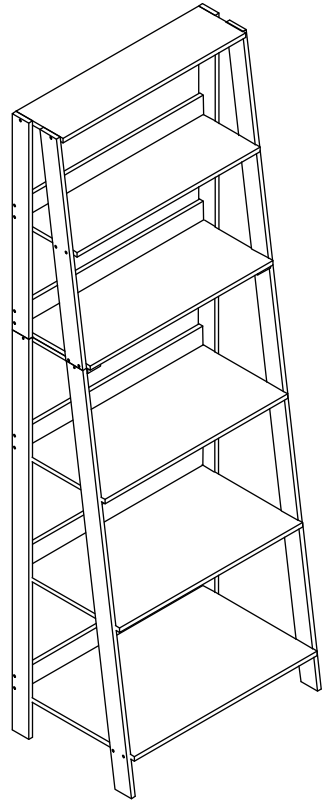

MODEL: 23220

support@furinno.com

www.furinno.com

2322020230921

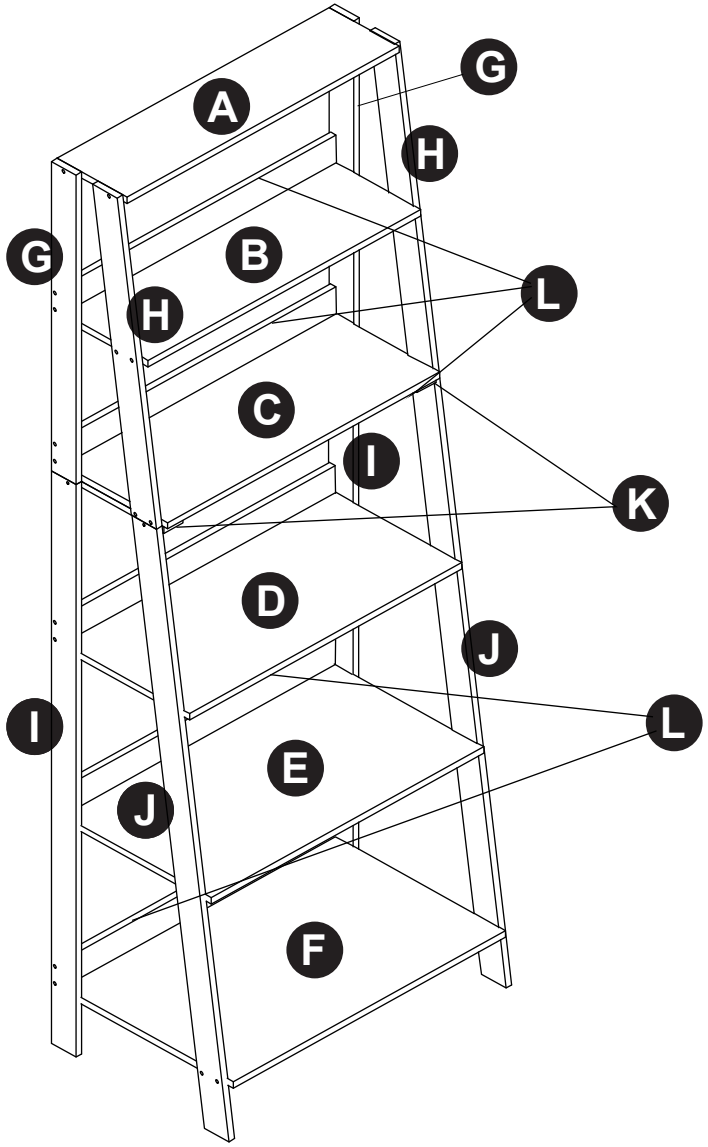

1 x 58	2 x 4	3 x 2
		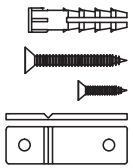
M4 x 32mm	#8x20mm	1/1/4” 4 X 32mm 3.5 X 10mm 13 X 43mm

7

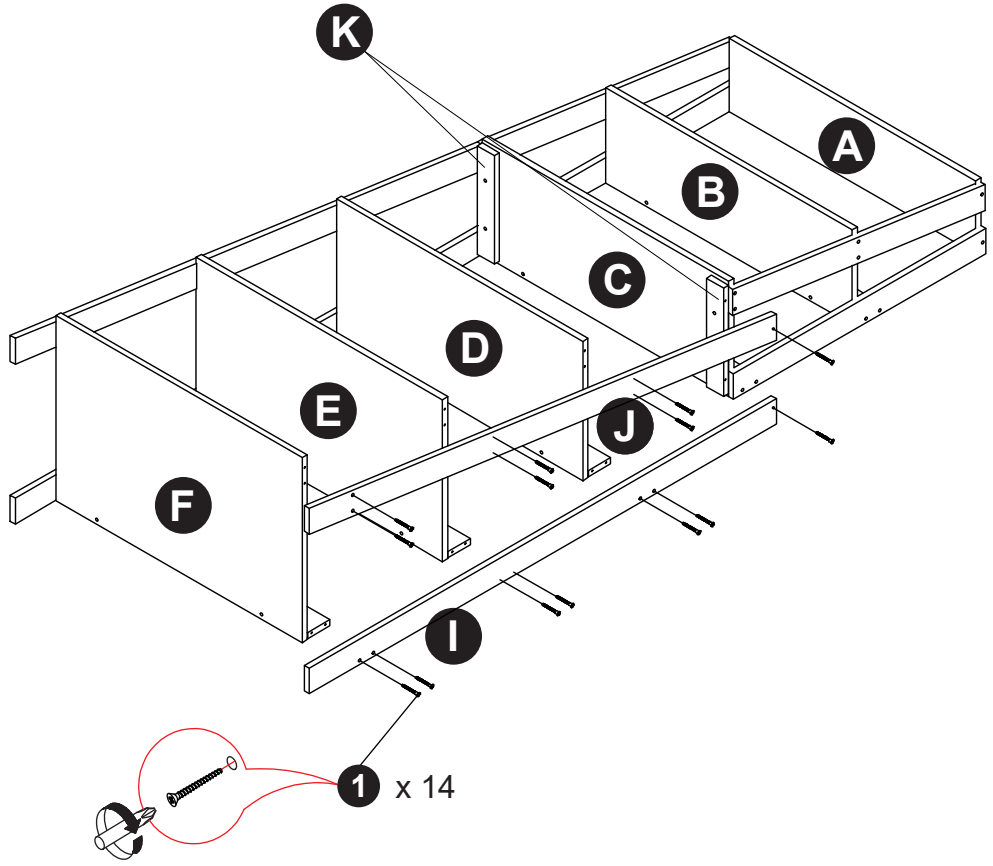

5

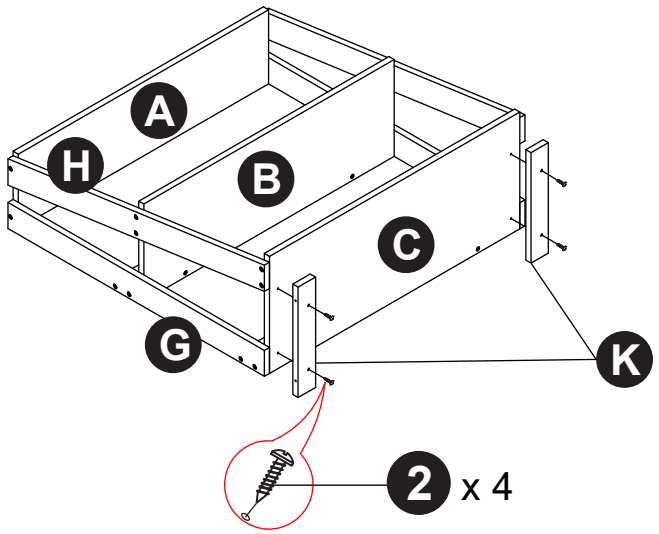

6

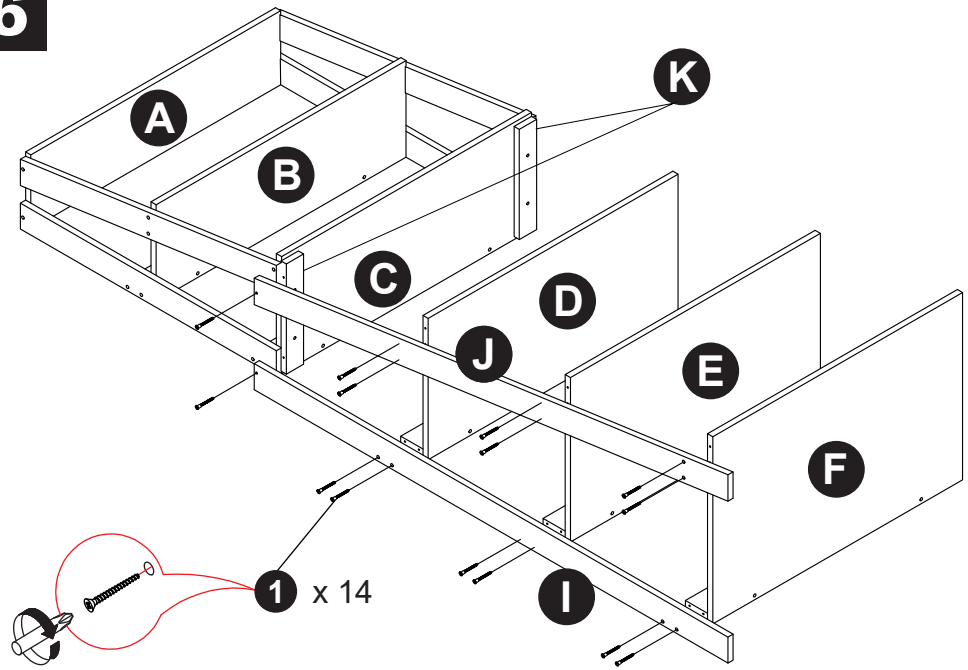

1

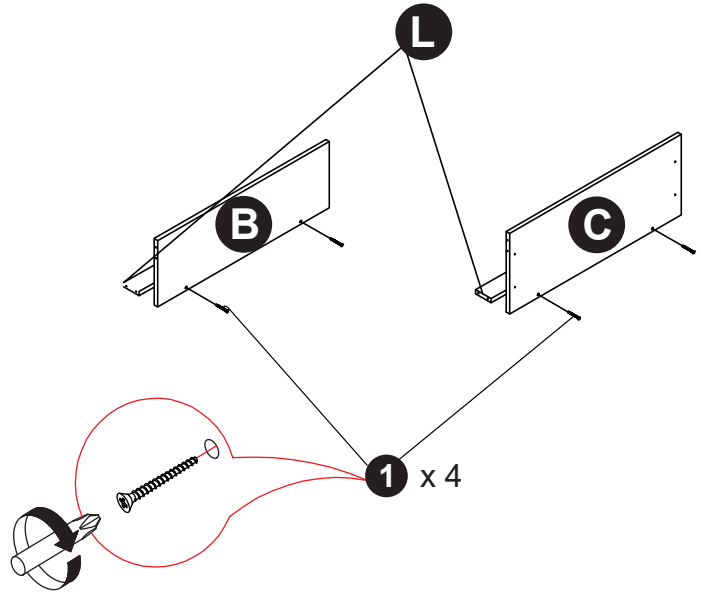

2

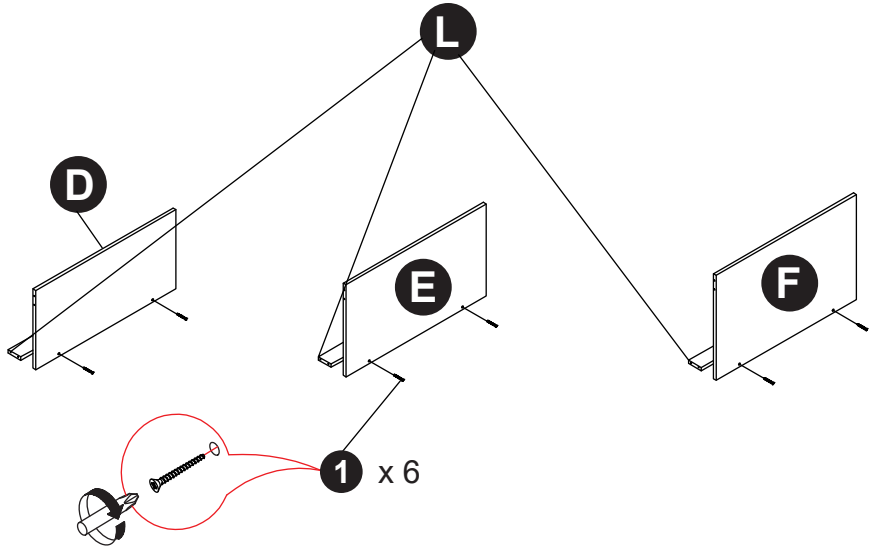

3

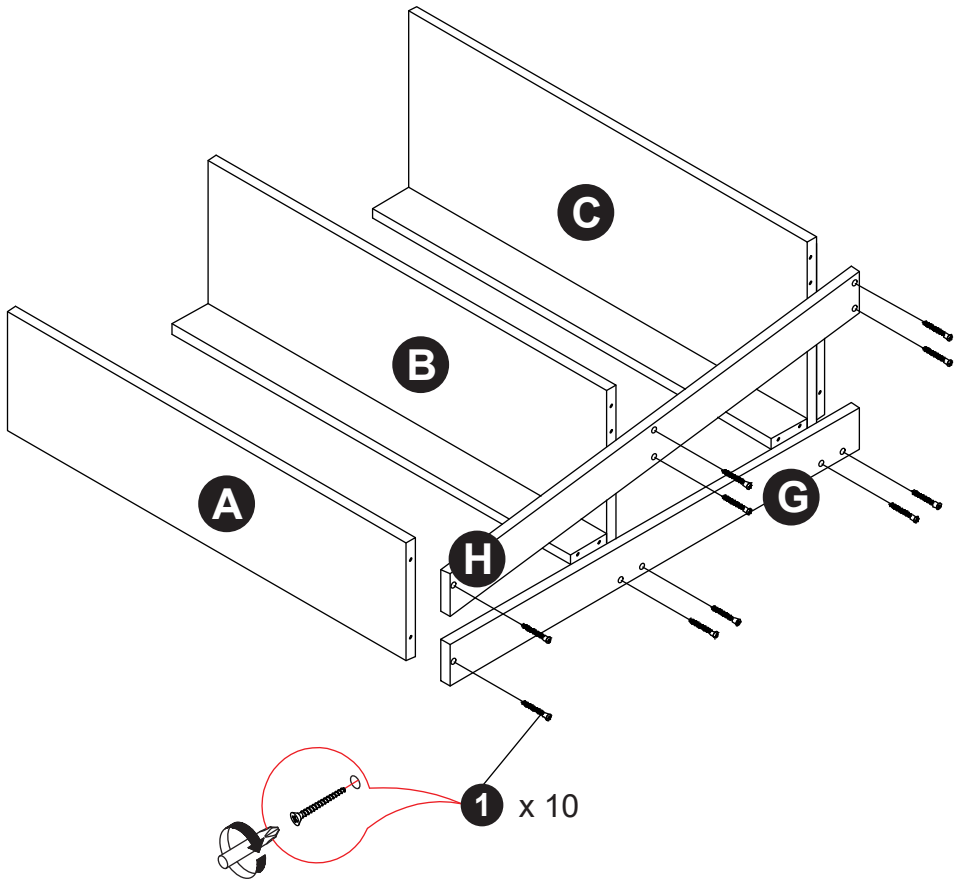

4

