14

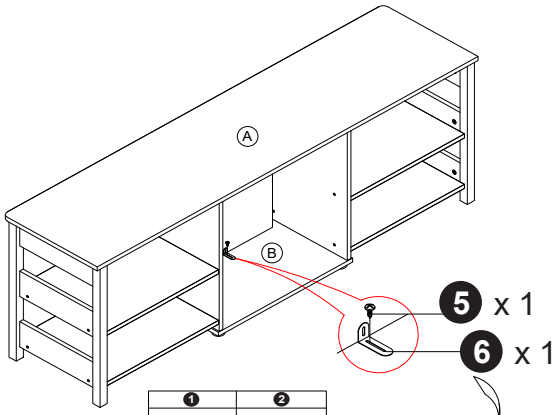

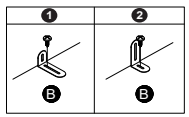

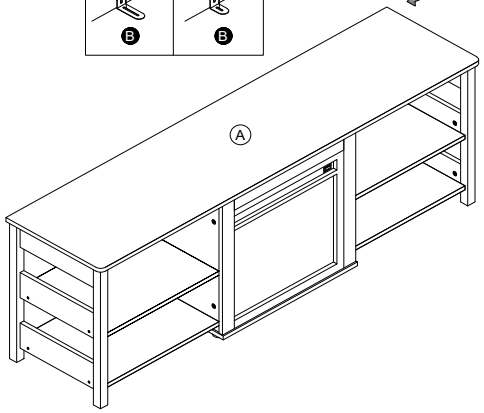

5 x 1

6 x 1

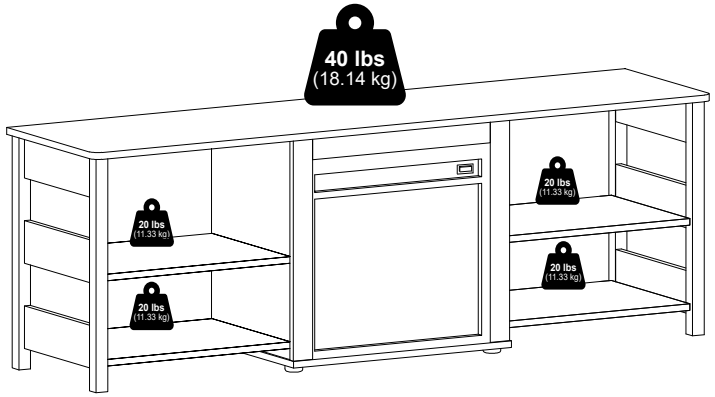

Furinno®

Fits Space, Fits Budget



01:00



x 2

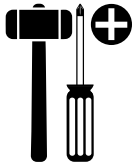

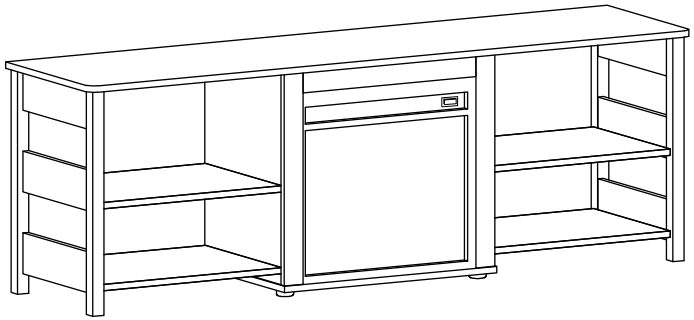

MODEL: 23349

support@furinno.com

www.furinno.com

2334920240424

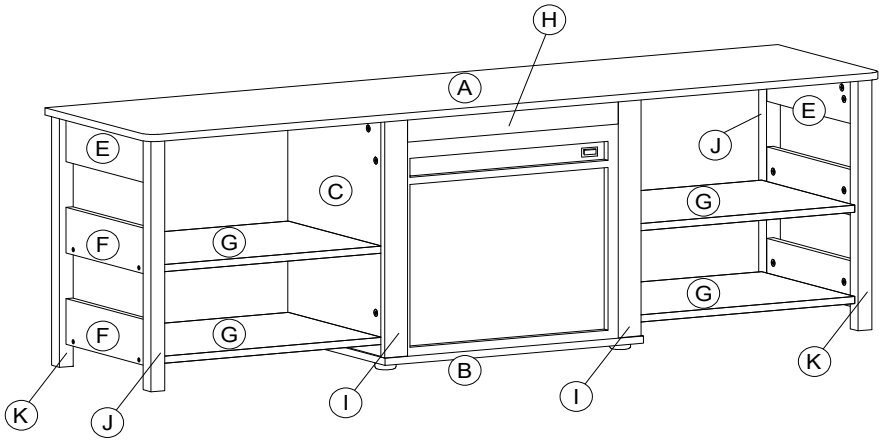

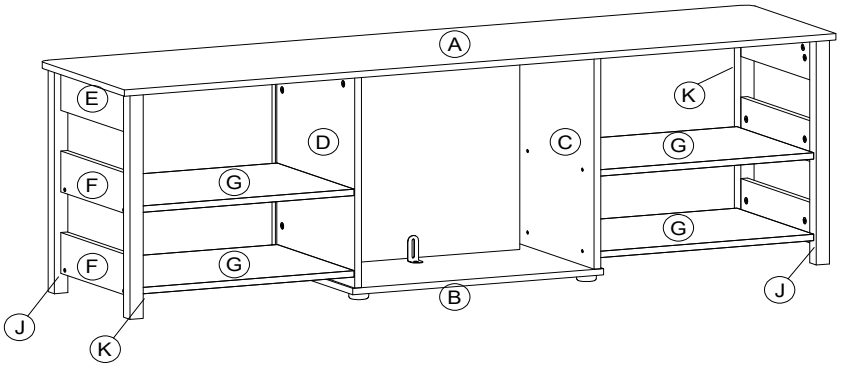

1 x 24 1a M6 x 31mm 1b 15mm	**2** x 52 M6 x 30mm	**3** x 20 M5 x 40mm	**4** x 2 17 x 22mm
5 x 9 M4 x 11mm	**6** x 1 1.2 x 24 x 90mm	**7** x 4 Ø40 x 14mm	**8** x 1

13

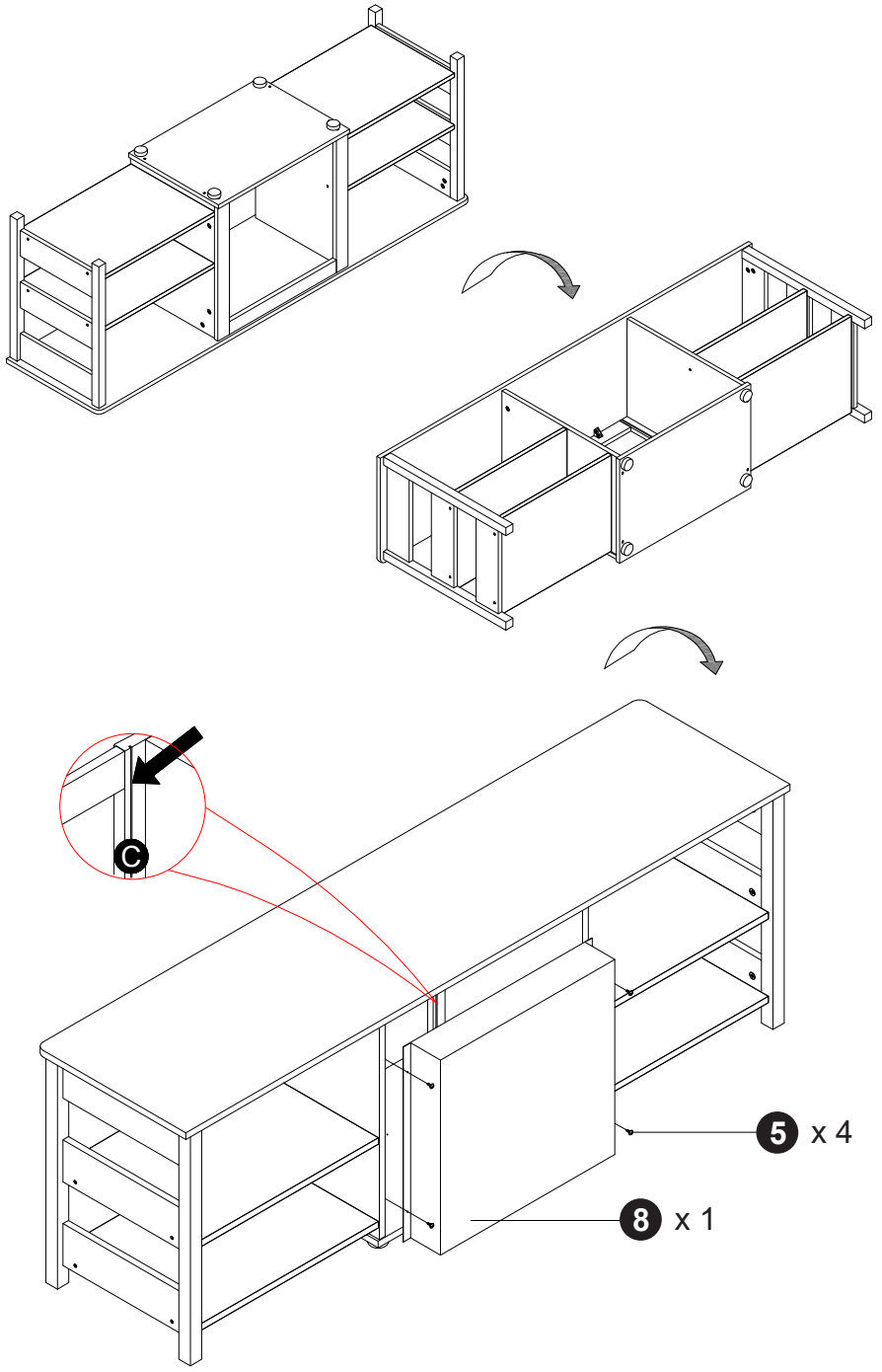

11

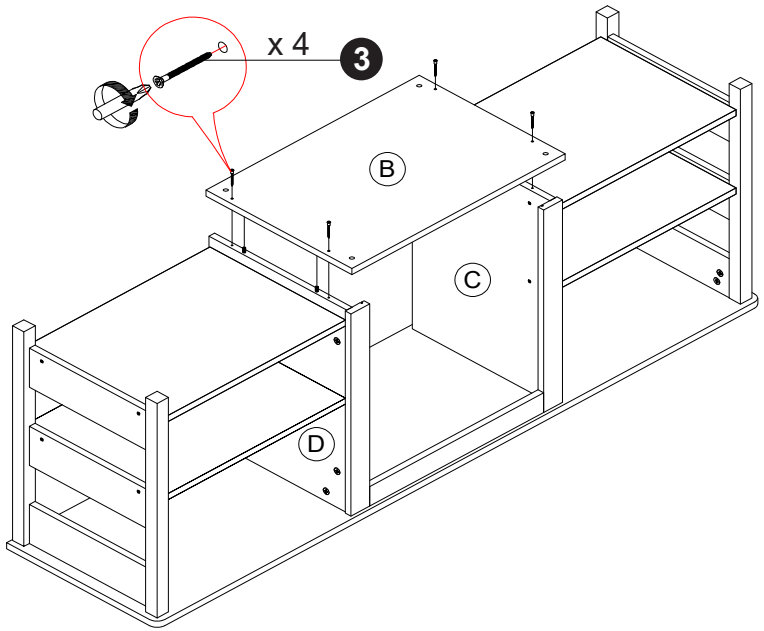

12

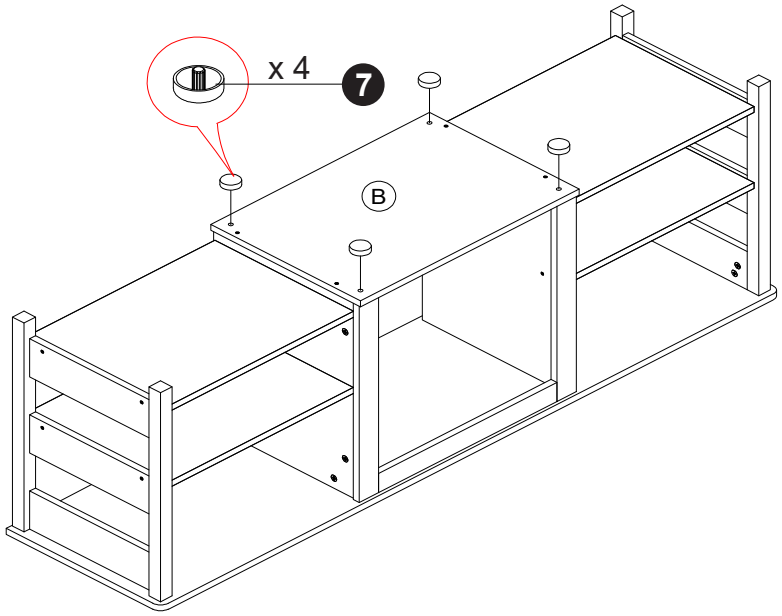

1

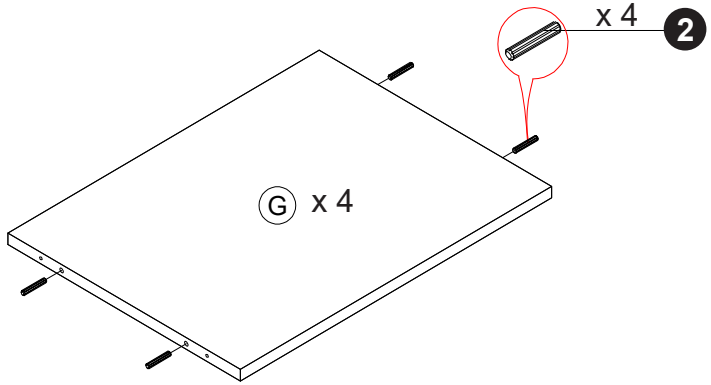

2

2.1

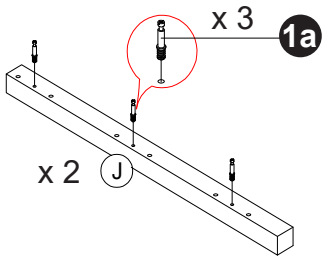

2.2

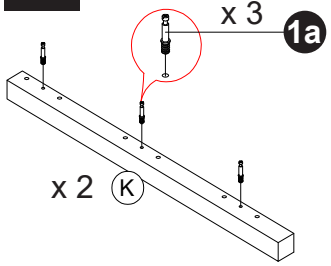

2.3

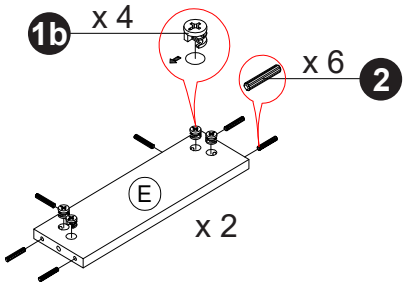

2.4

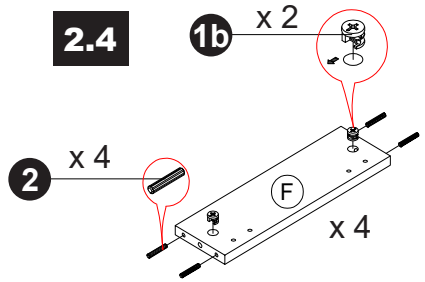

3

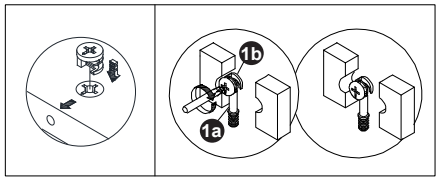
1b
1a

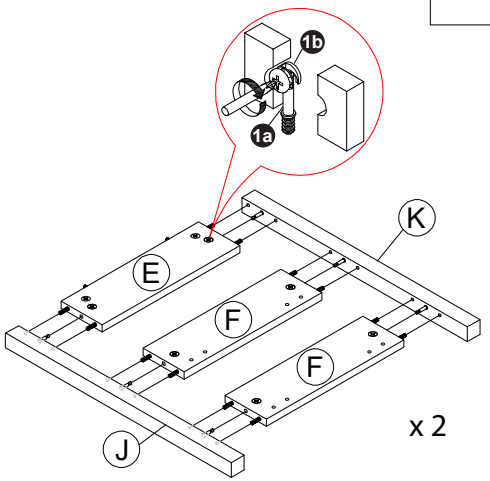
1b
1a
K
E
F
F
J
x 2

4

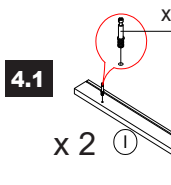
4.1
x 2
1a
x 2
I

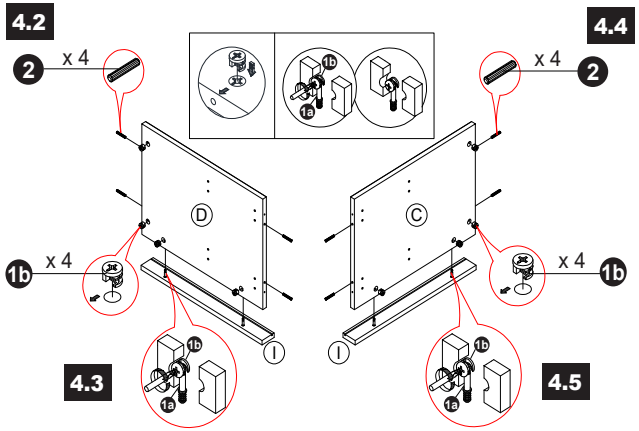
4.2
2
x 4
4.4
x 4
2
1b
x 4
x 4
1b
D
C
I
I
4.3
4.5

9

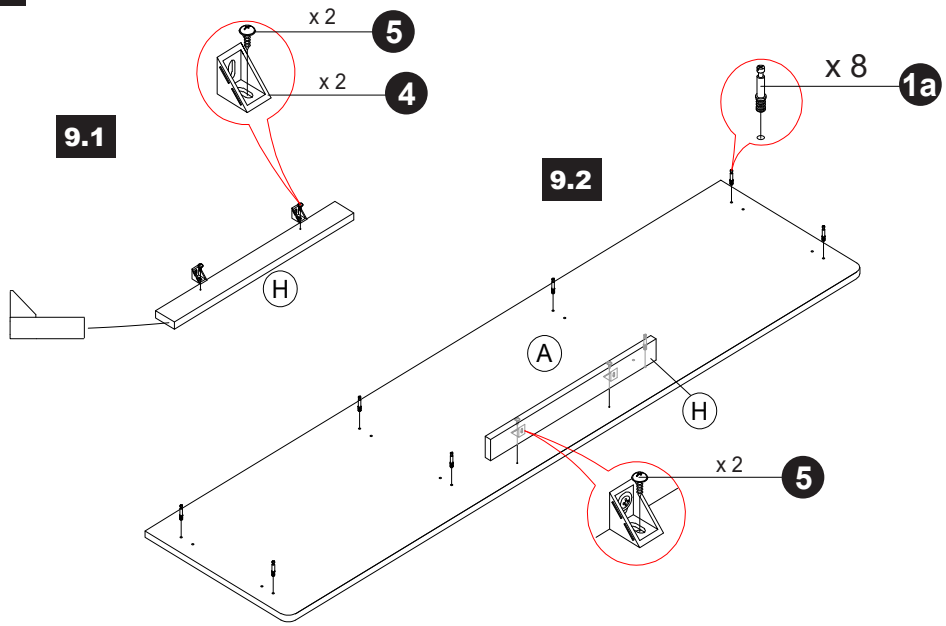
9.1
x 2
5
x 2
4
H
9.2
x 8
1a
A
H
x 2
5

10

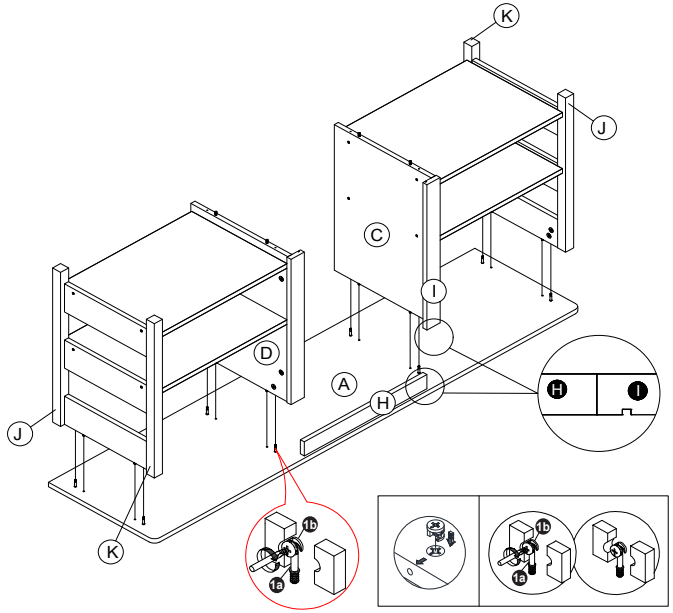
K
J
C
I
D
A
H
H
I
J
K
1b
1a
1b
1a

8

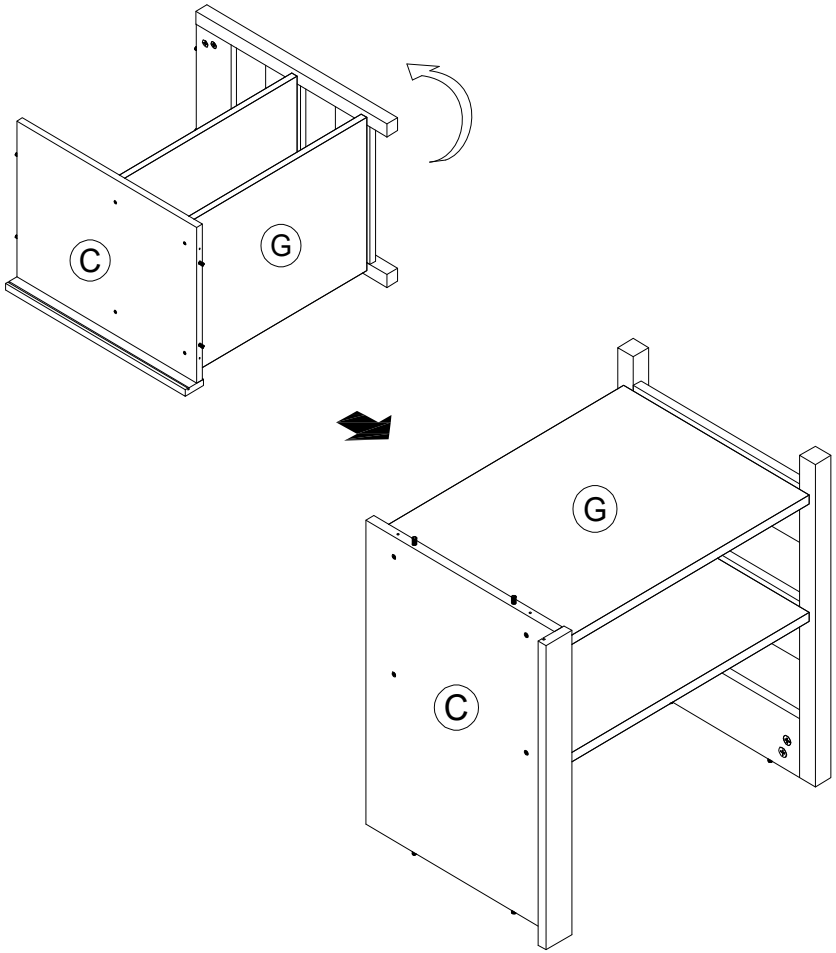

5

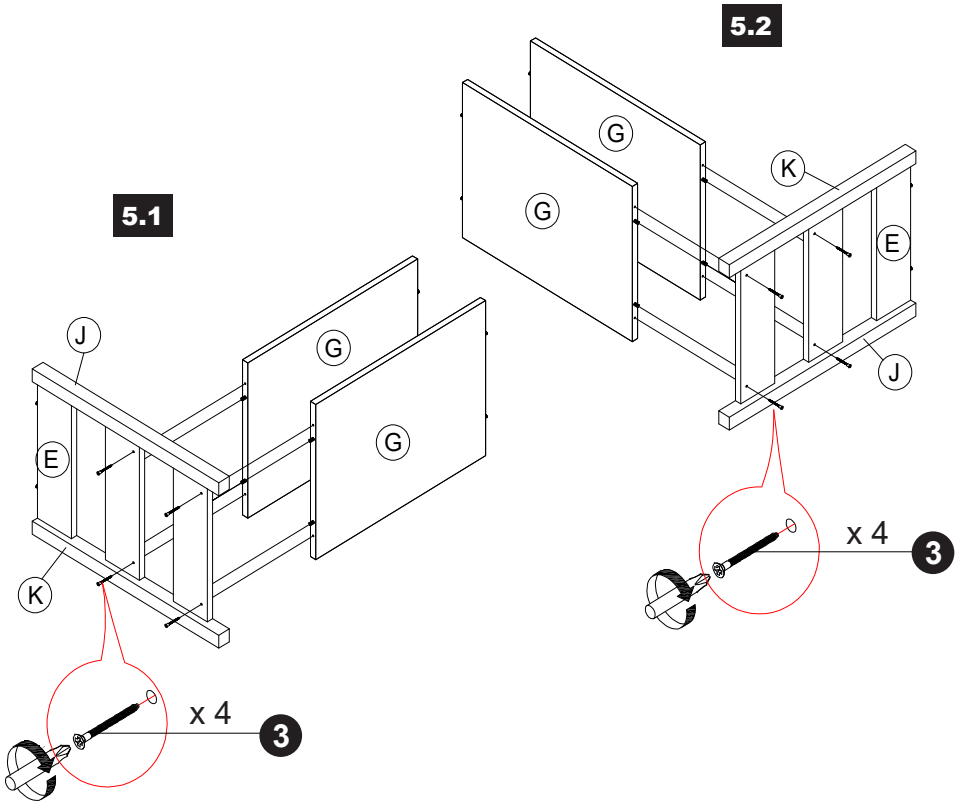

6

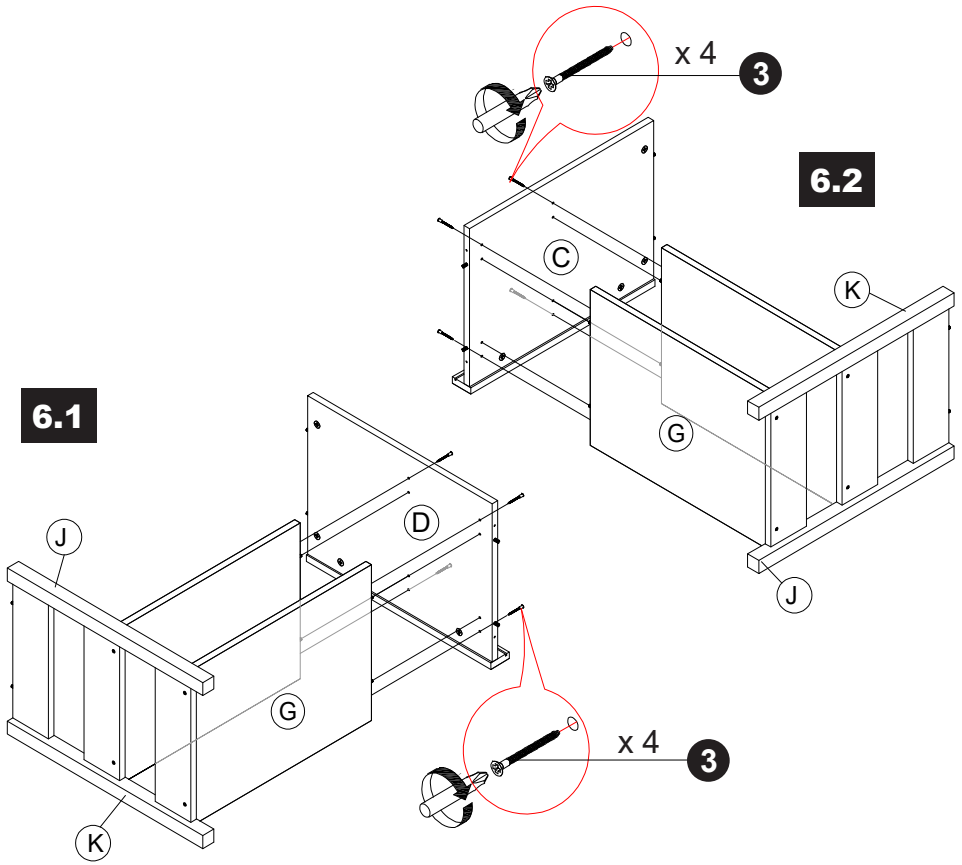

7

