11

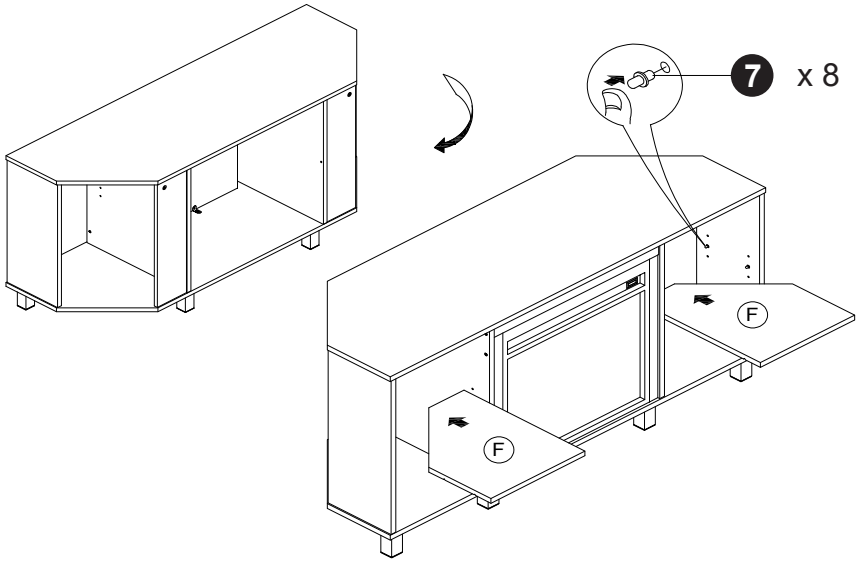

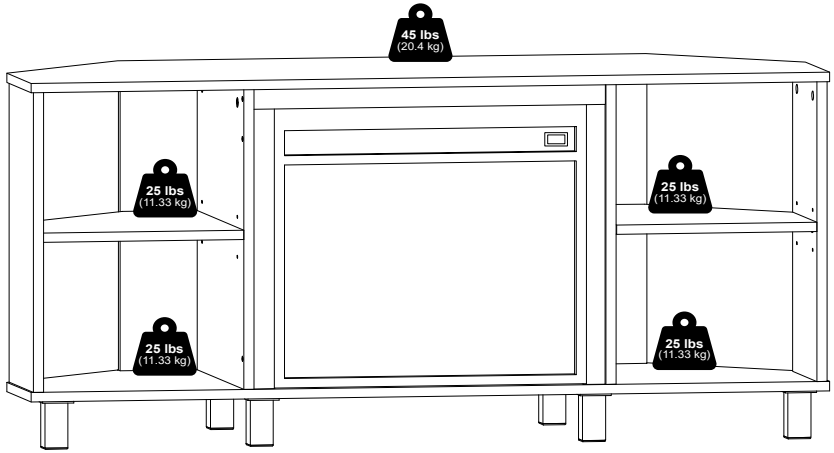

Furinno®

Fits Space, Fits Budget

01:00

x 2

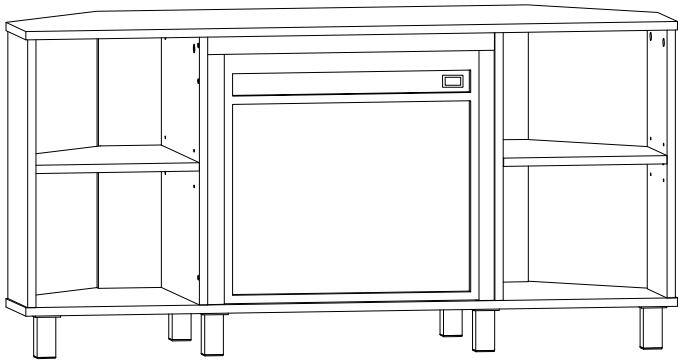

MODEL: 23351

support@furinno.com

www.furinno.com

2335120240424

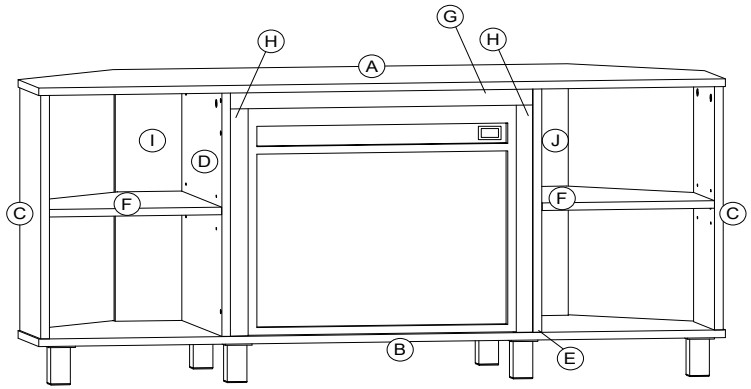

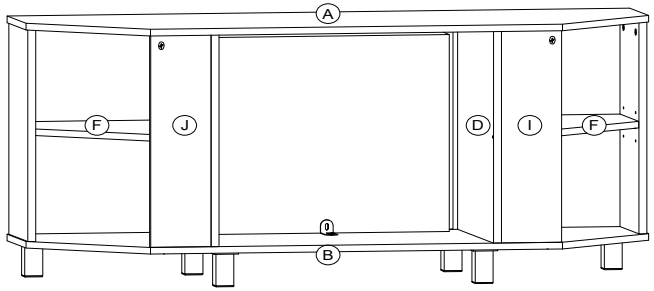

1 x 10 1a 8 x 31mm 1b 15mm	**2** x 18 M6 x 20mm	**3** x 12 M5 x 40mm	**4** x 6 M4 x 32mm
5 x 5 M4 x 11mm	**6** x 1 1.2 x 24 x 90mm	**7** x 8	**8** x 24 M3.5 x 12mm
9 x 6 35 x 35 x 78mm	**10** x 1		

9

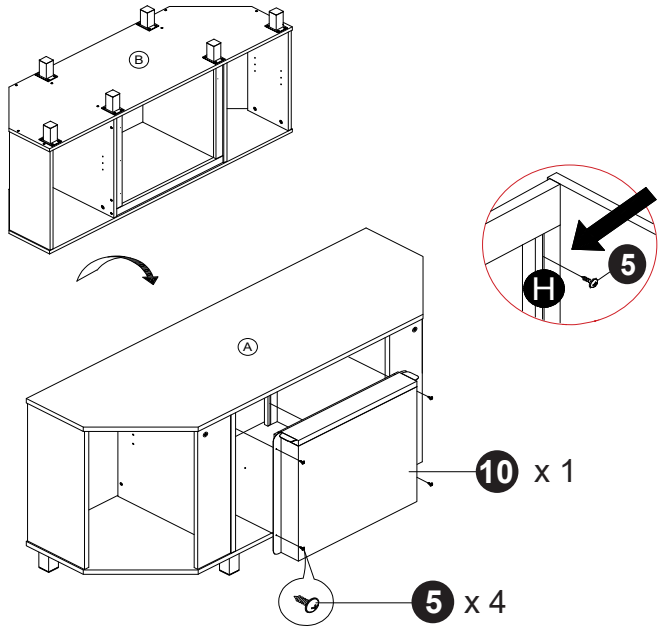

10

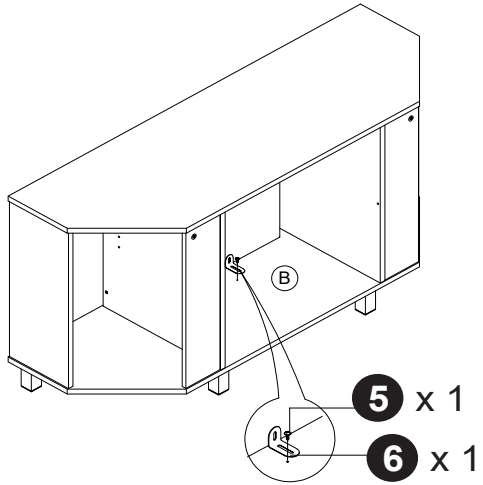

7

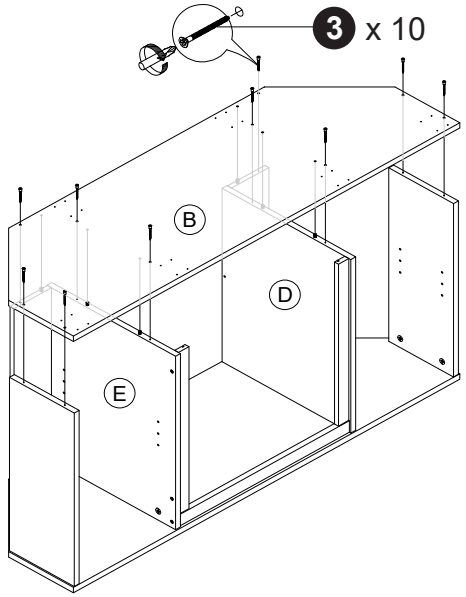

8

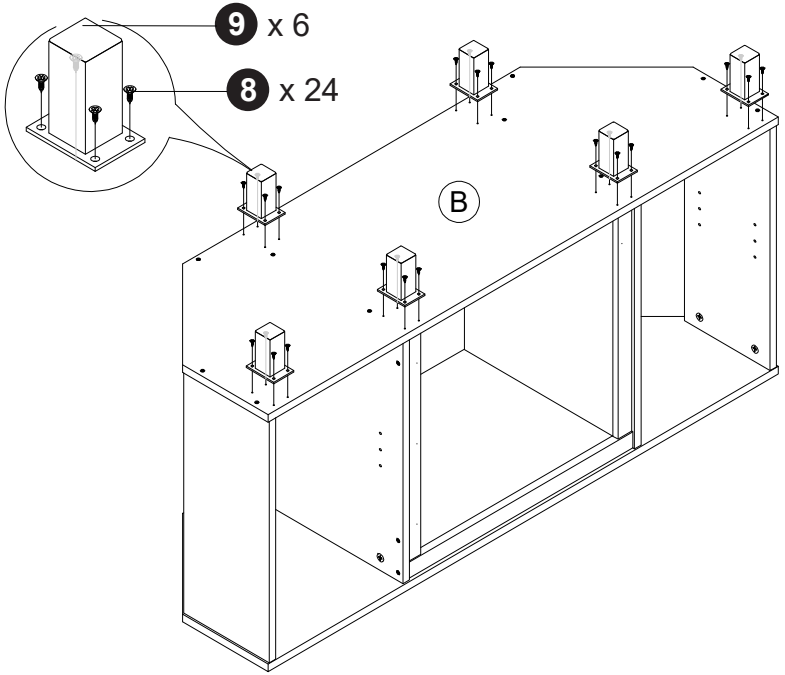

1

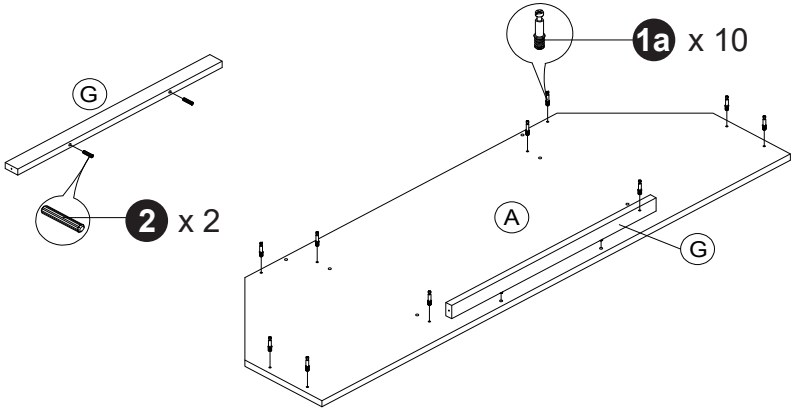

2

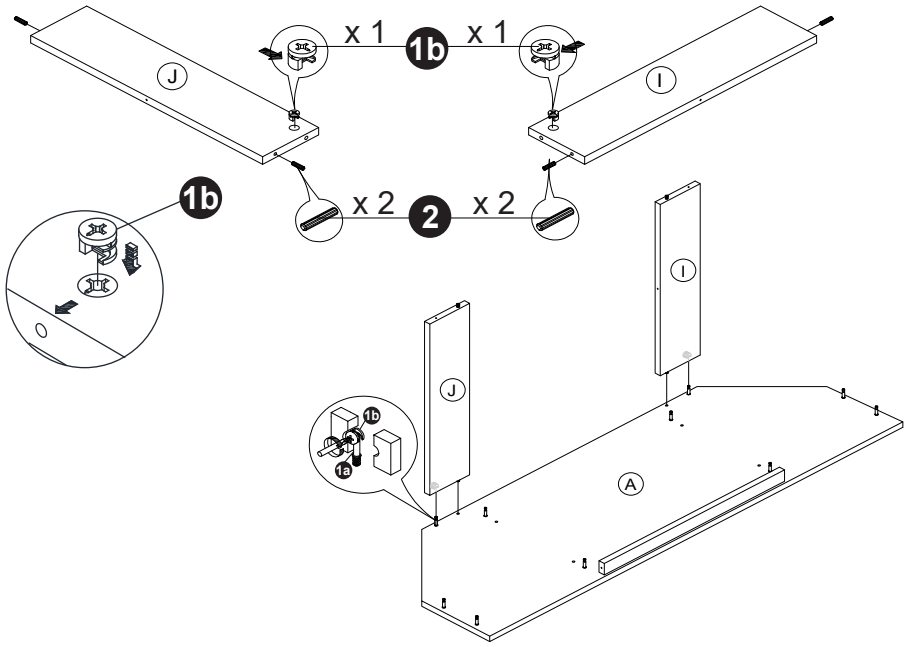

3

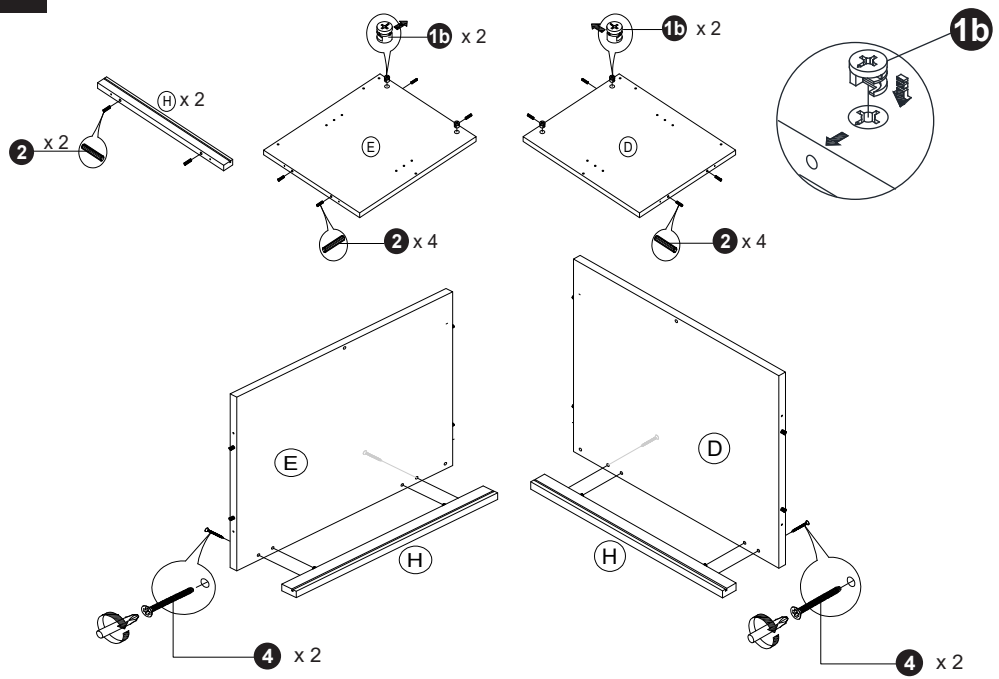

4

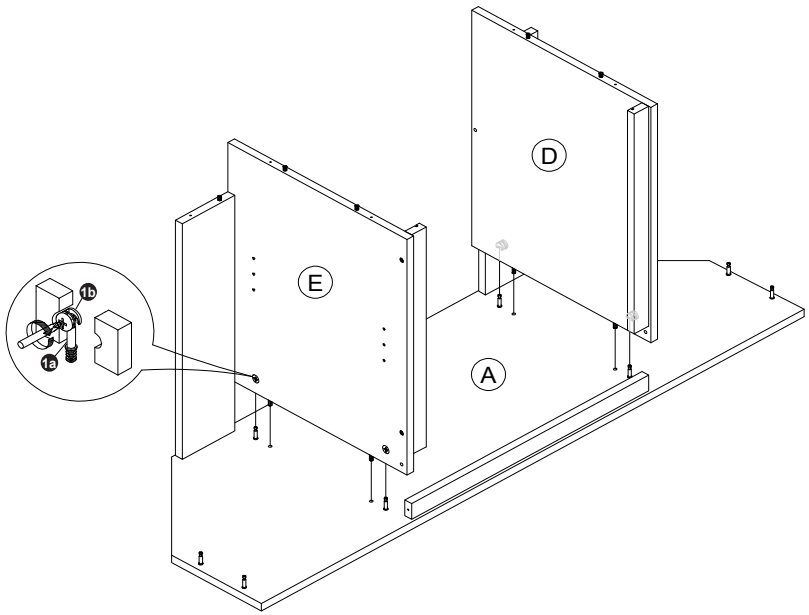

5

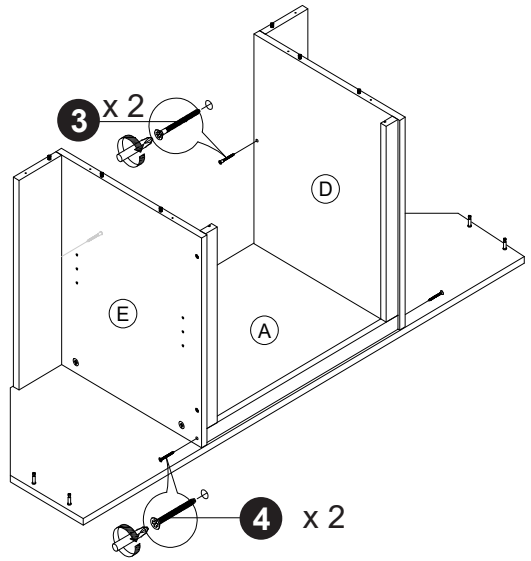

6

