14

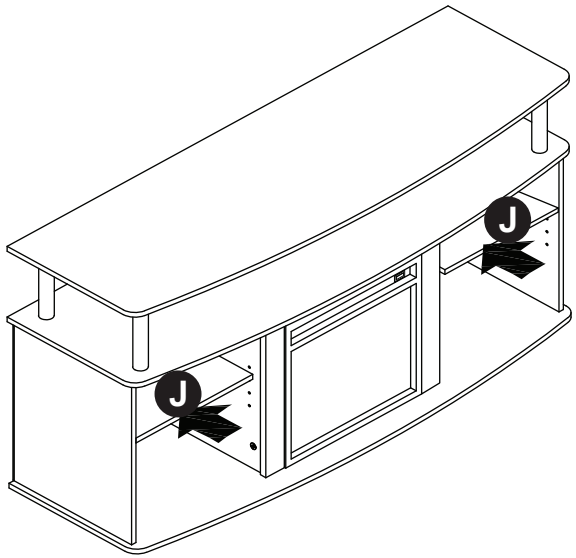

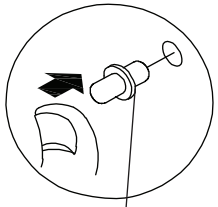



Furinno®

Fits Space, Fits Budget



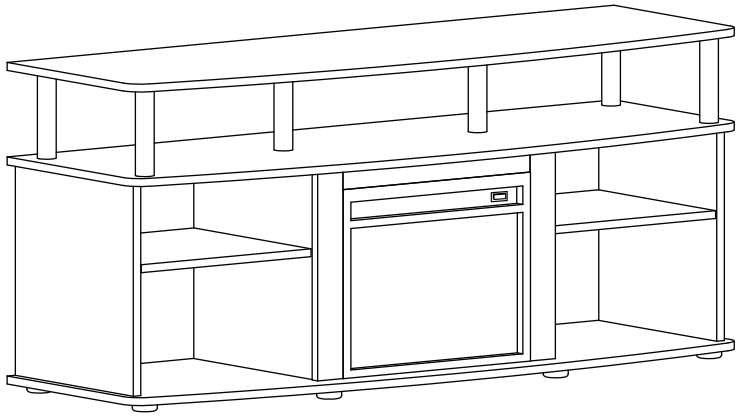

MODEL: 23356

support@furinno.com ***www.furinno.com***

2335620240424

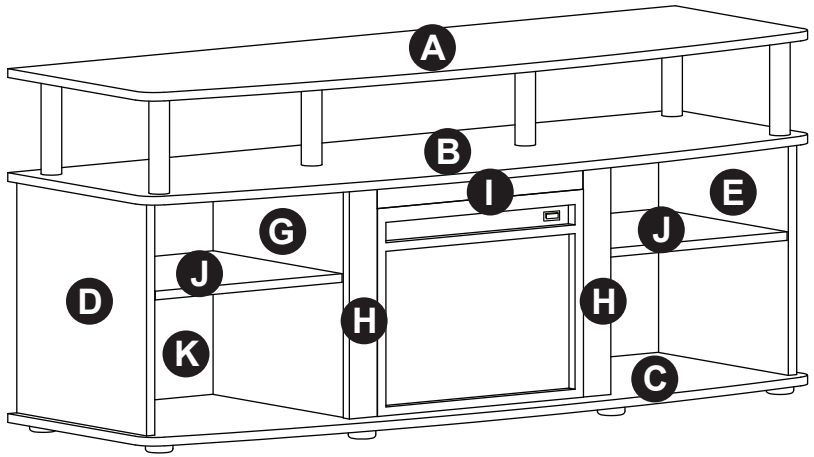

1 x 12 M6 x 31mm	2 x 12 15mm	3 x 16 M6 x 20mm	4 x 8 M5 x 40mm
5 x 28 2.5 x 18mm	6 x 9 M4 x 11mm	7 x 2 17 X 22mm	8 x 1 1.2 x 24 x 90mm
9 x 8 5 x 6 x 16mm	10 x 6 Ø34 x 8mm	11 x 6 Ø30 x 162mm	12 x 7 Ø40 x 14mm
13 x 1	14 x 6 34 x 2mm	15 x 1	

12

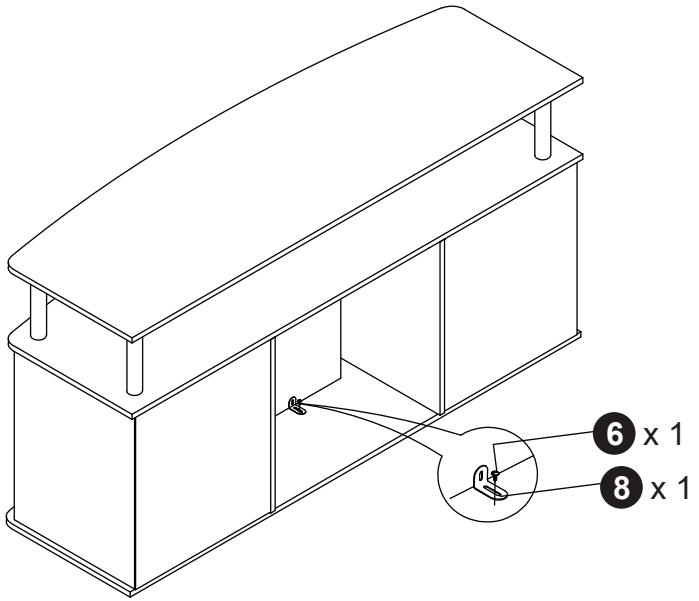

13

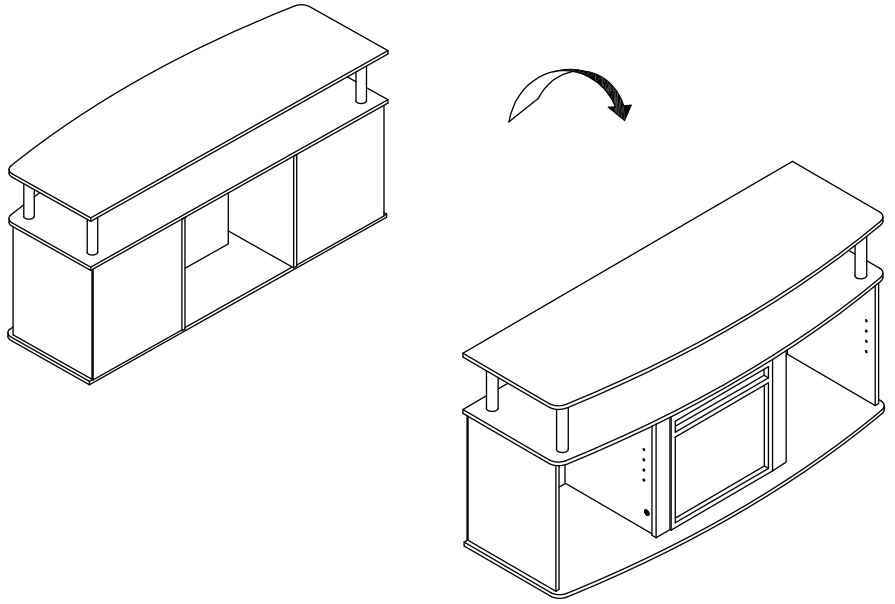

11

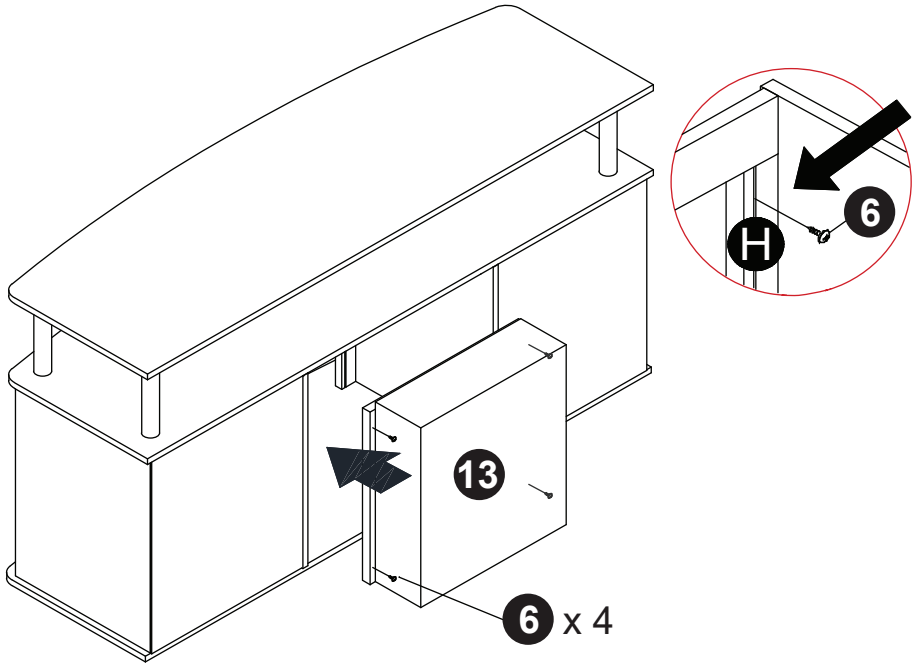

1

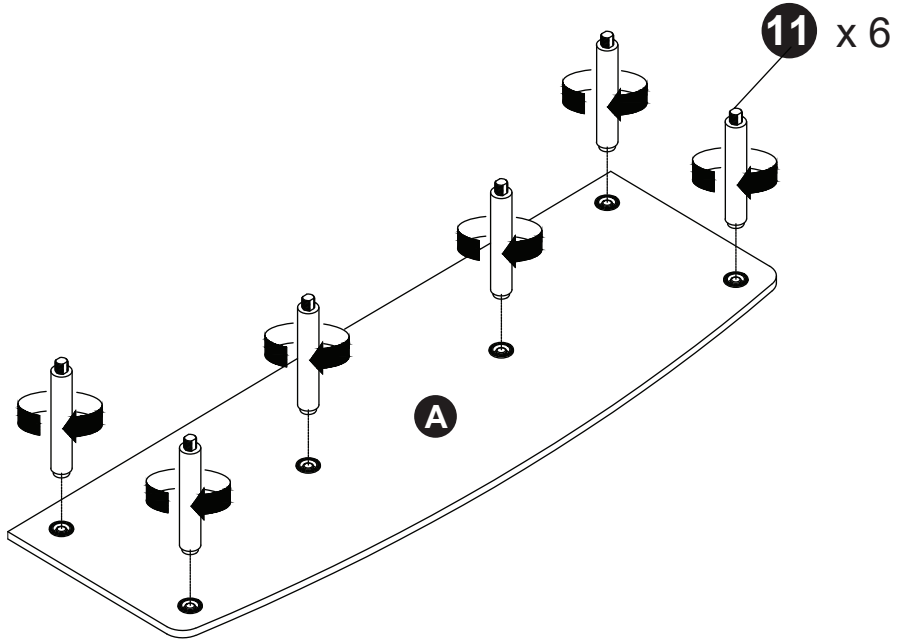

2

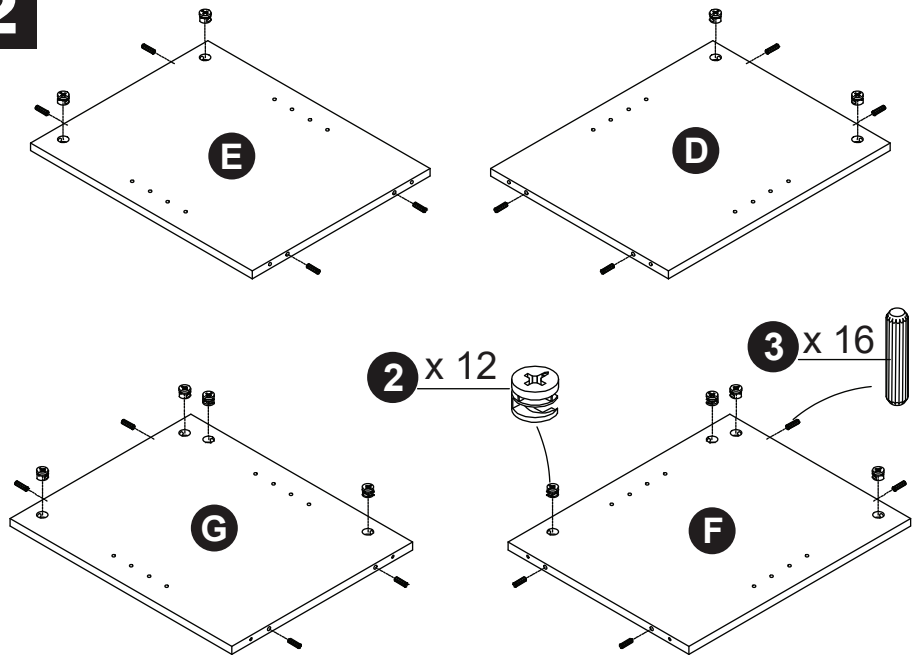

3

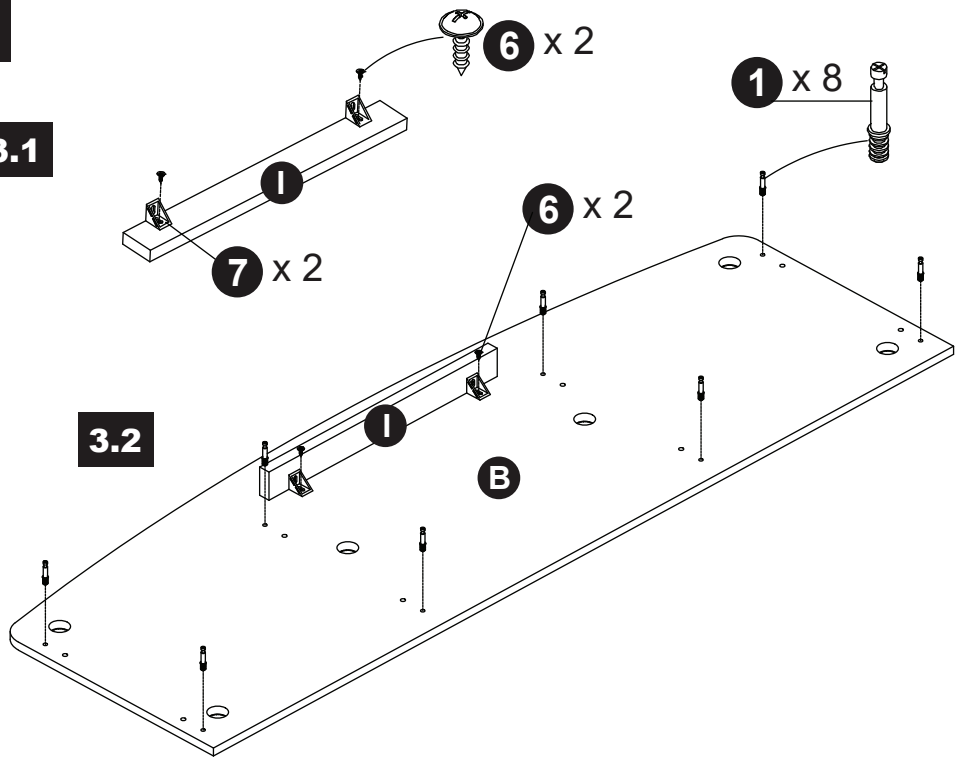

4

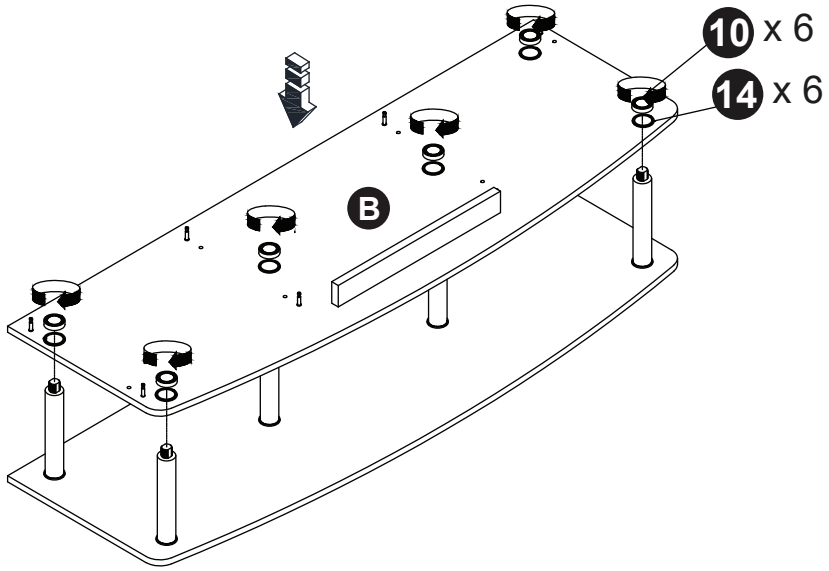

9

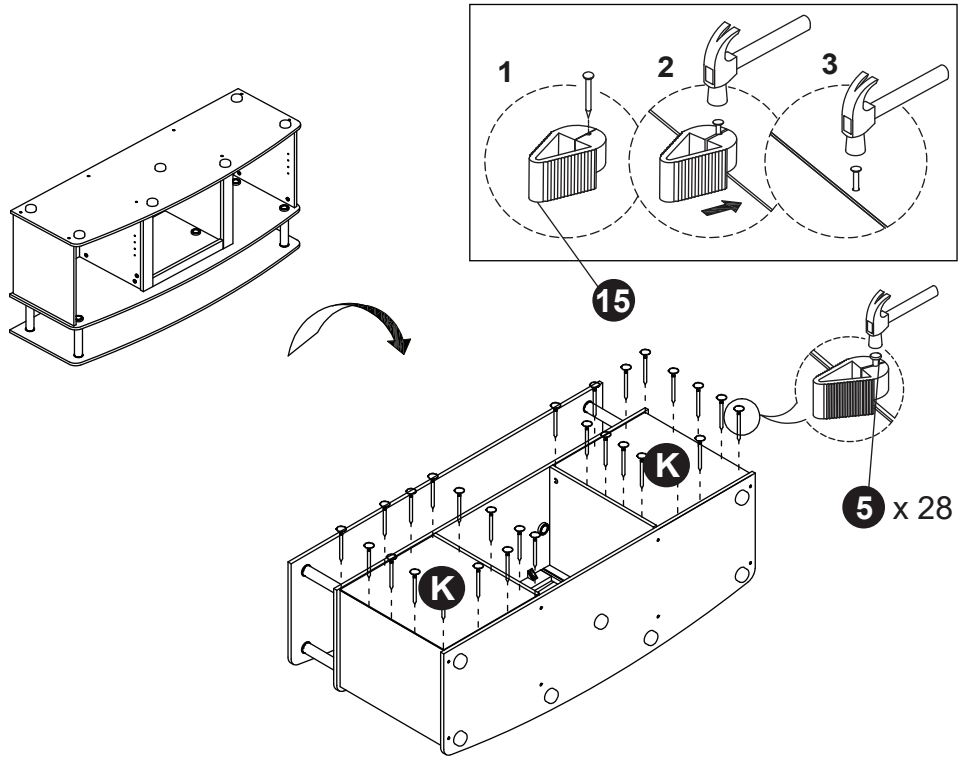

10

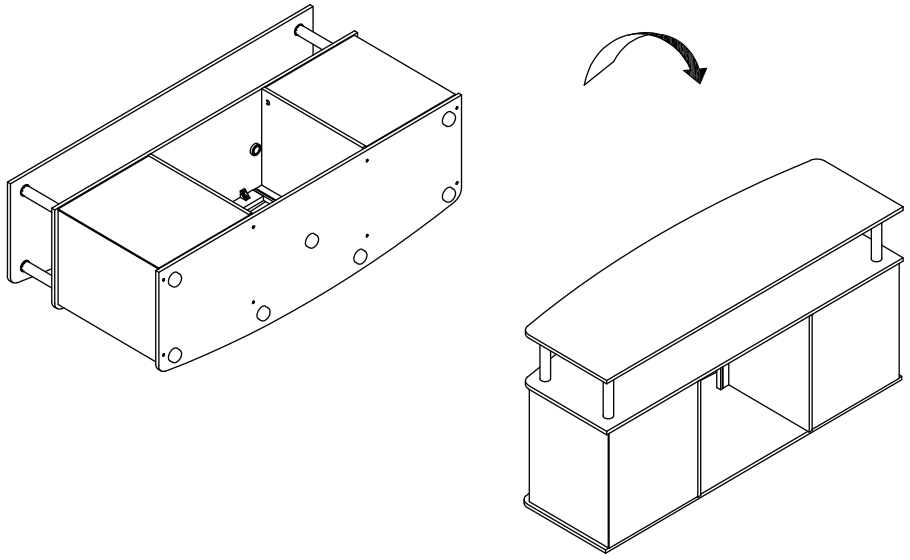

8

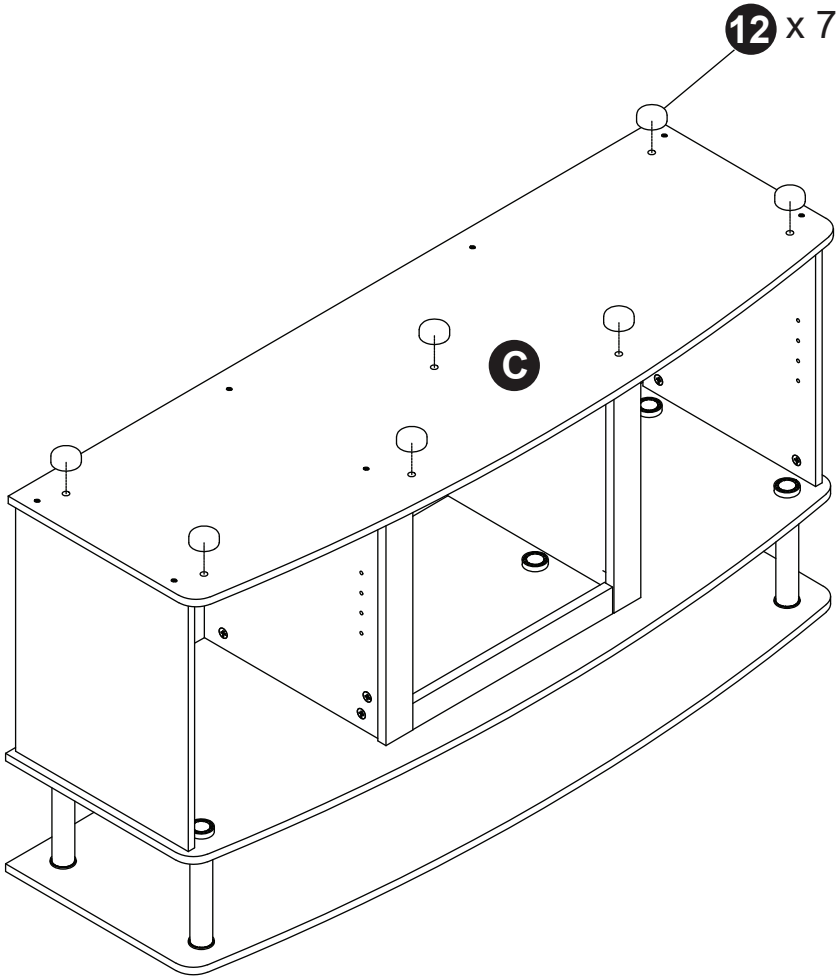

5

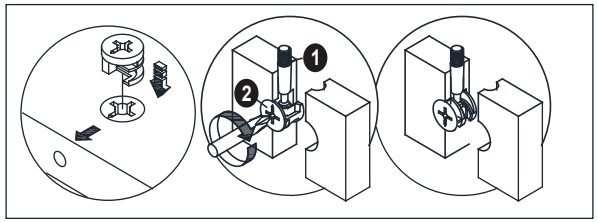

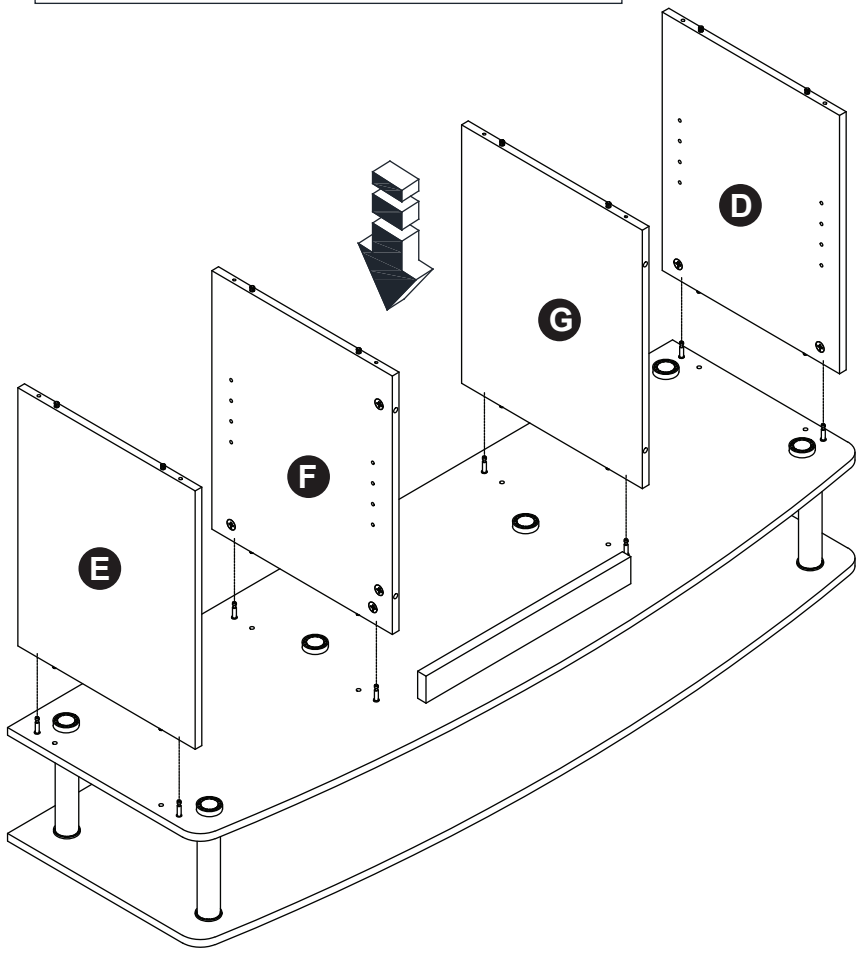

6

6.1

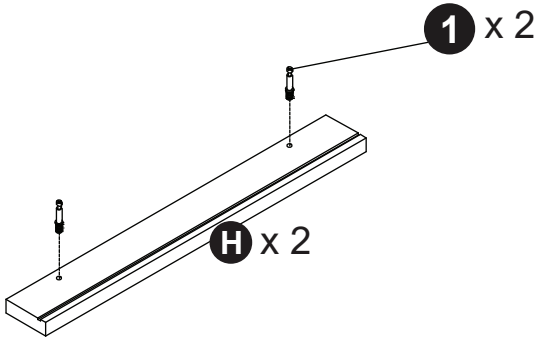

6.2

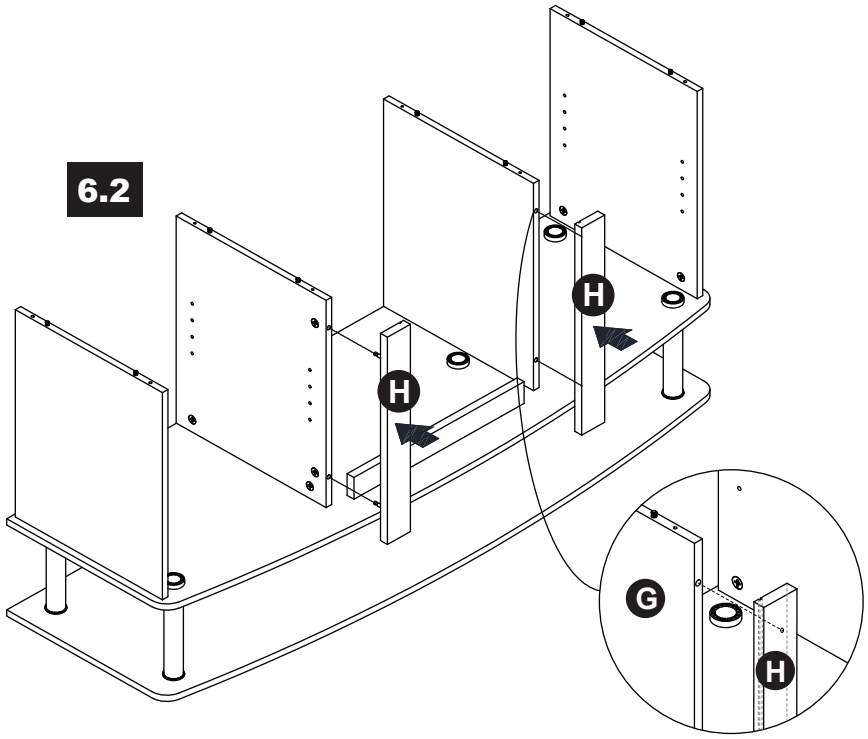

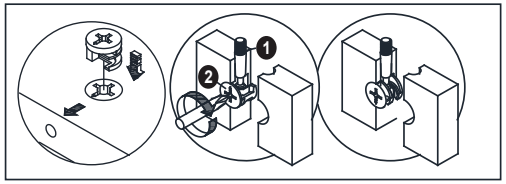

7

