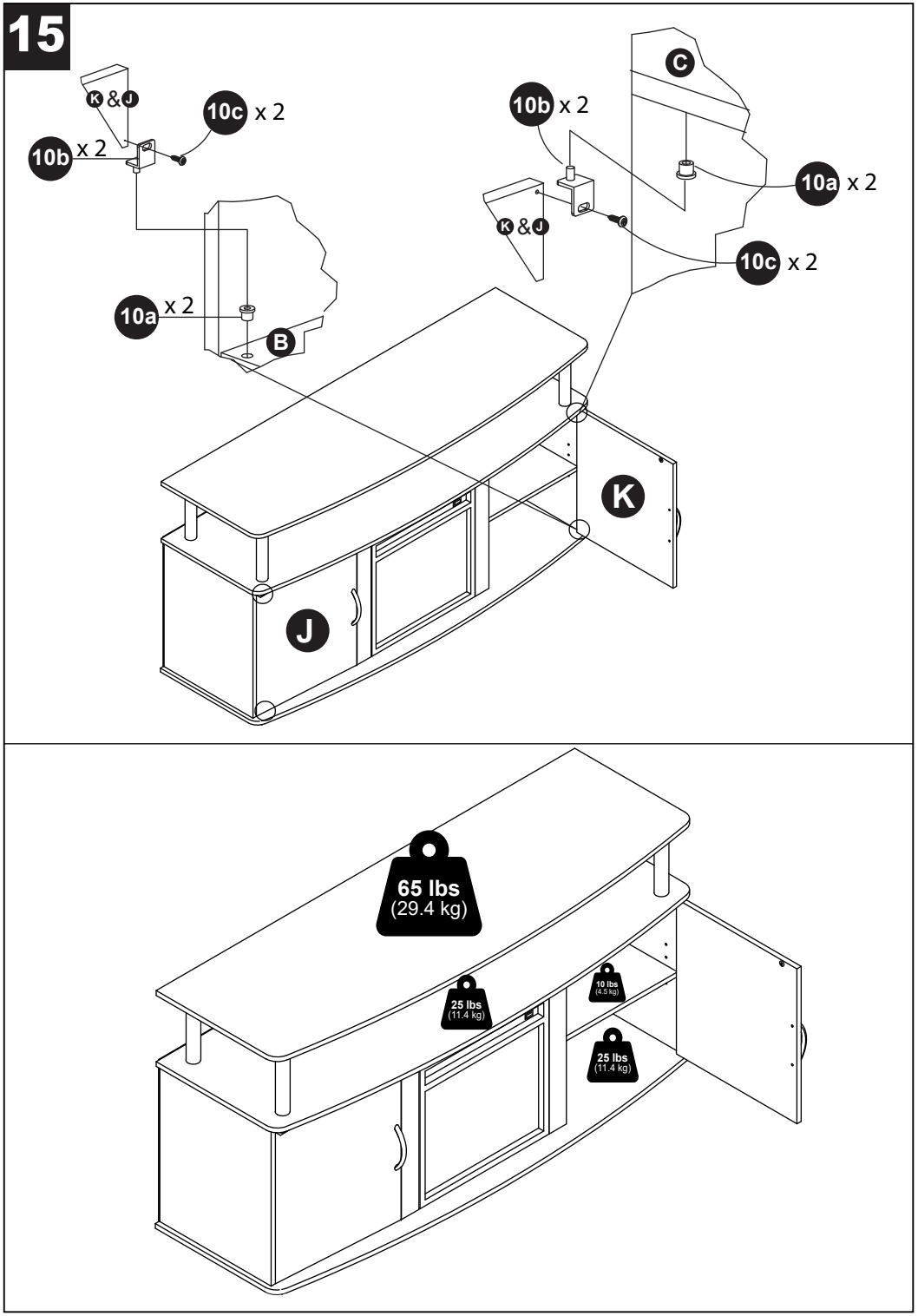




Furinno®

*Fits Space, Fits Budget*




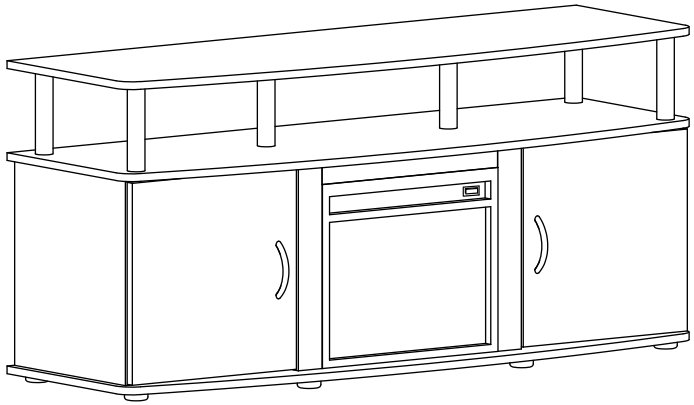

**MODEL: 23359**

*support@furinno.com*

*www.furinno.com*



2335920240424

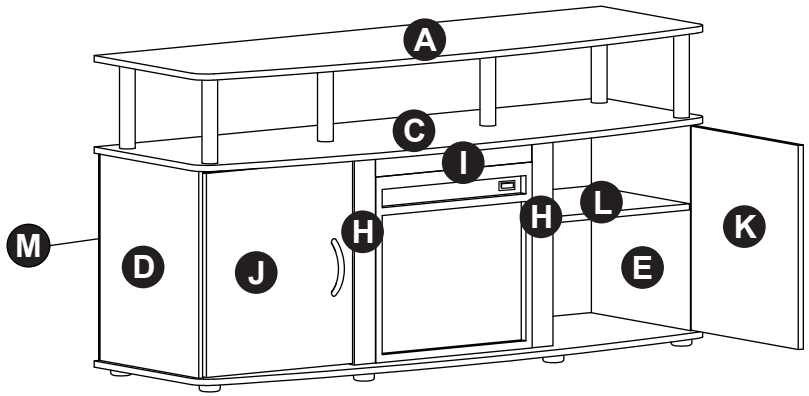


| | | | |
|---|---|---|---|
| 1 x 12<br>M8 x 24mm | 2 x 12<br>12mm | 3 x 16<br>M6 x 20mm | 4 x 8<br>M5 x 40mm |
| 5 x 28<br>2.5 x 18mm | 6 x 9<br>M4 x 11mm | 7 x 2<br>17 X 22mm | 8 x 1<br>1.2 x 24 x 90mm |
| 9 x 8<br>5 x 6 x 16mm | 10 x 2<br>a b c | 11 x 2 | 12 x 2<br>M5 x 6mm |
| 13 x 2<br>131 x 26mm | 14 x 4<br>M3.6 x 19mm | 15 x 6<br>Ø34 x 8mm | 16 x 6<br>Ø30 x 162mm |
| 17 x 7<br>Ø40 x 14mm | 18 x 1 | 19 x 6<br>34 x 2mm | 20 x 1 |



## 13

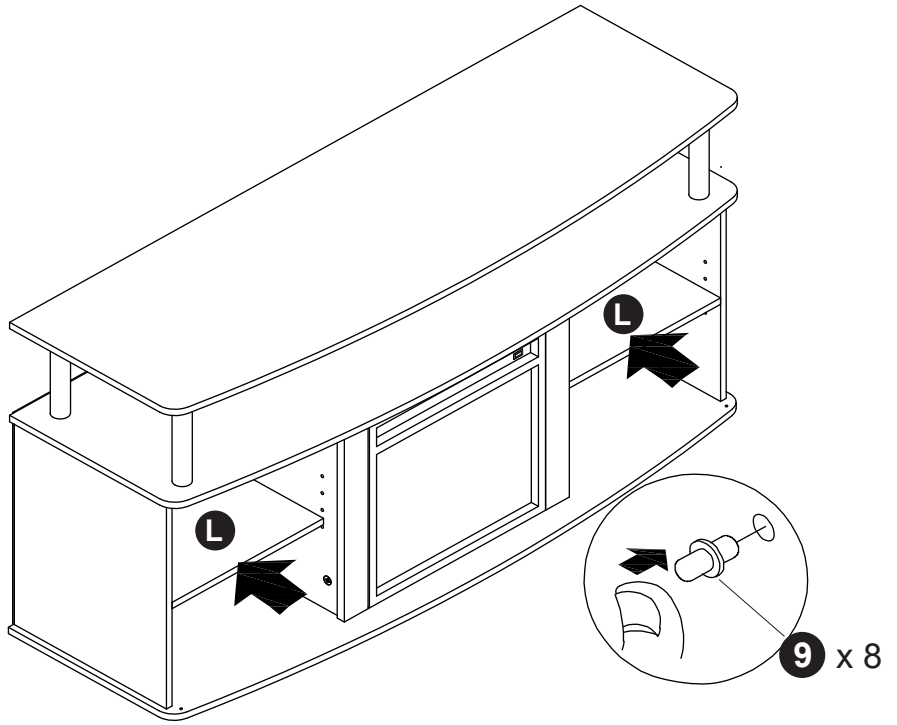


## 14

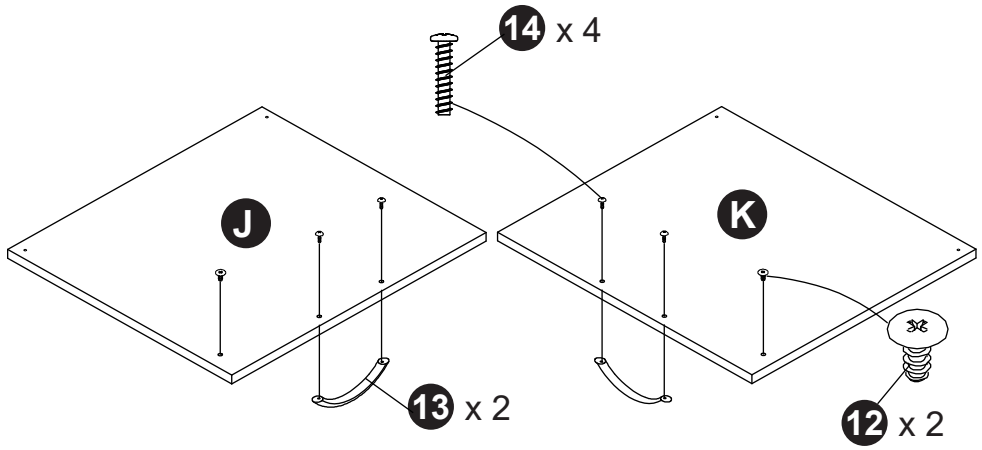

**11**

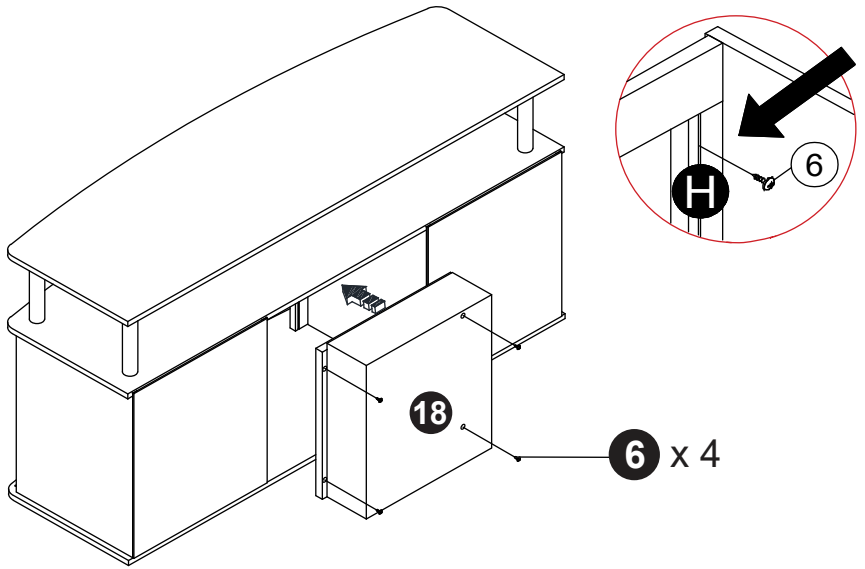


**12**

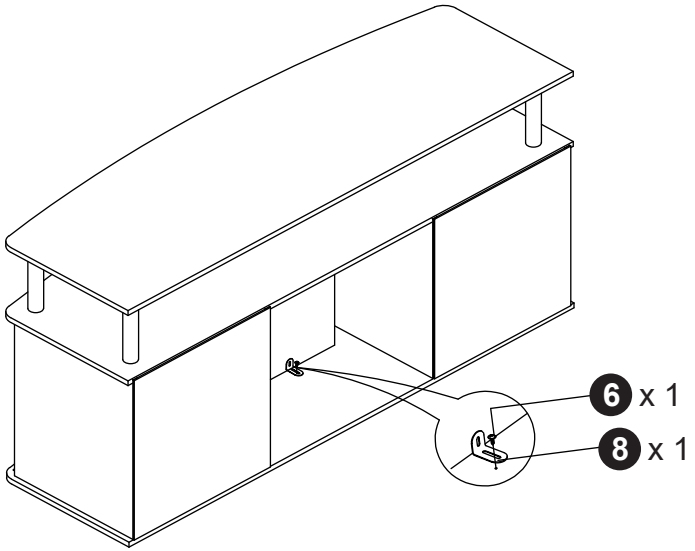




**1**

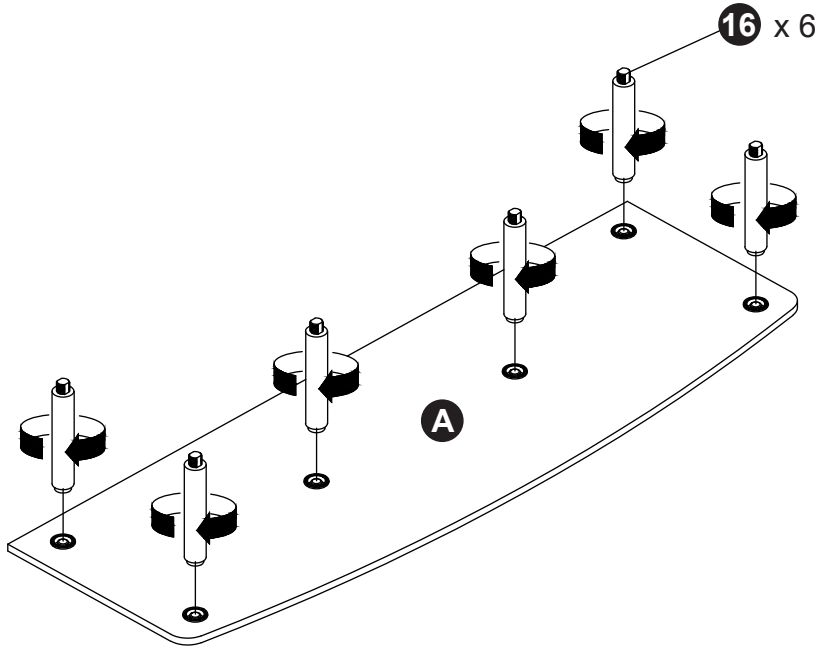


**2**

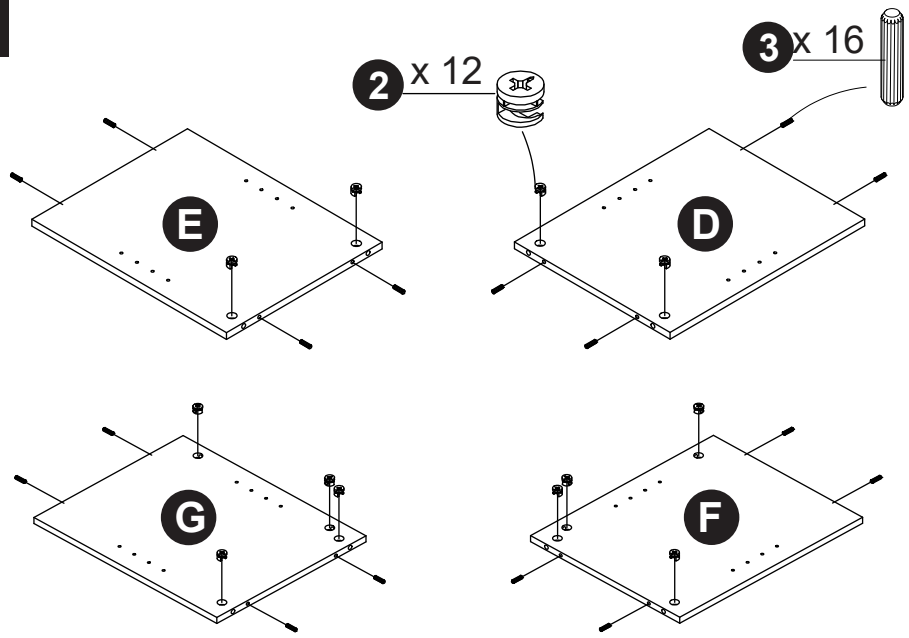

## 3

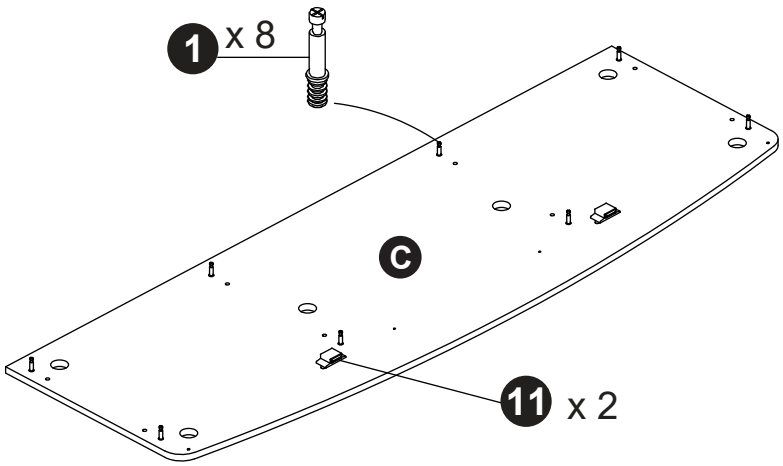


## 4

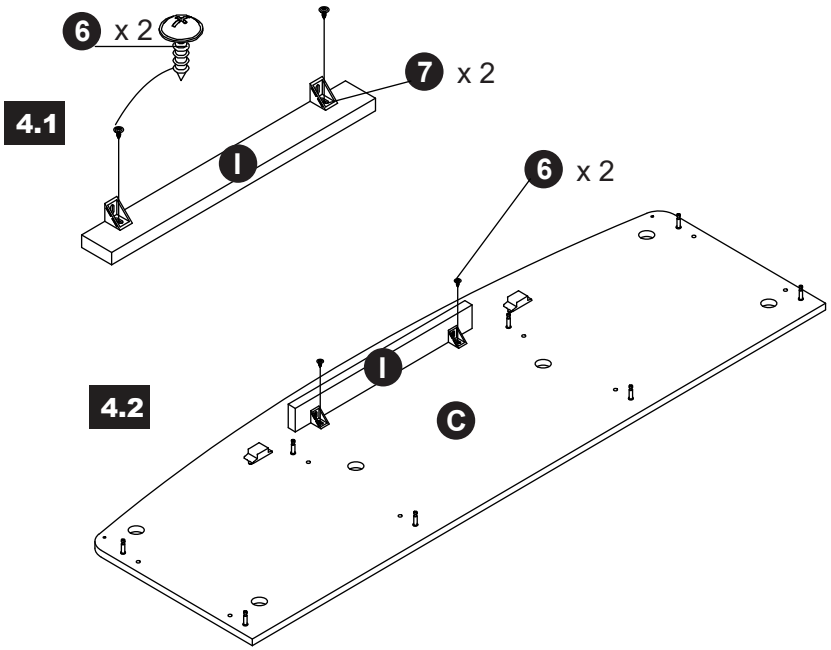




## 9

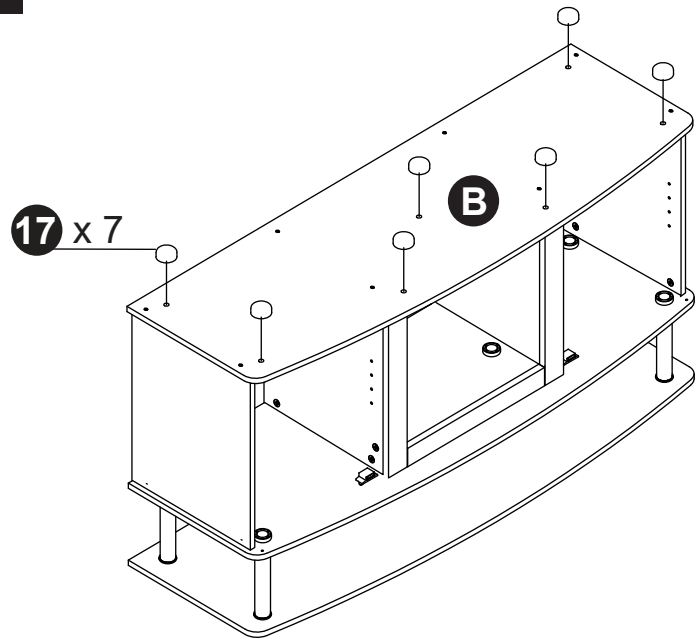


## 10

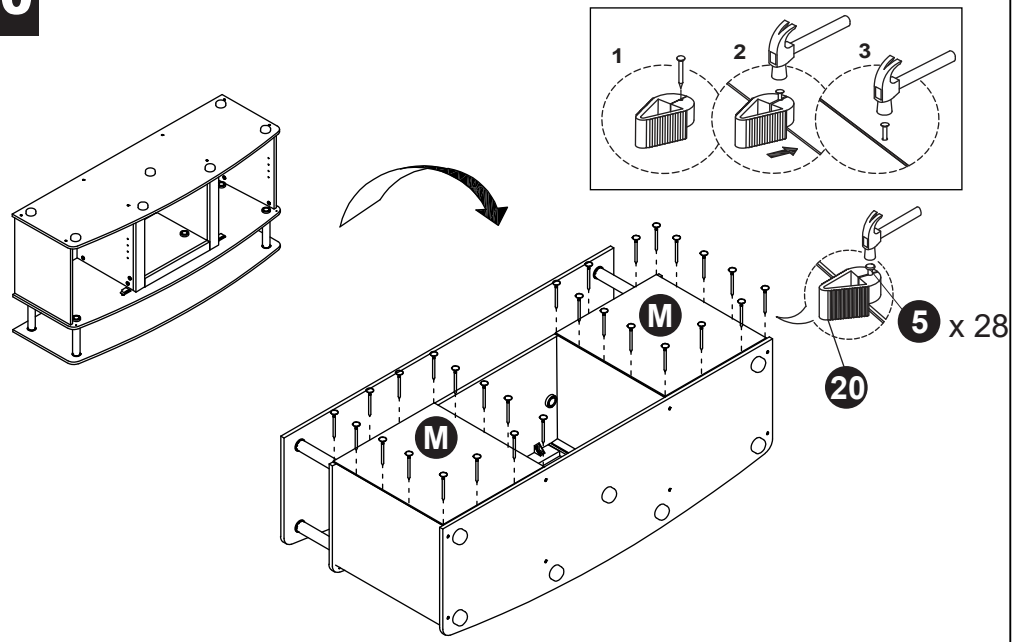

# 8

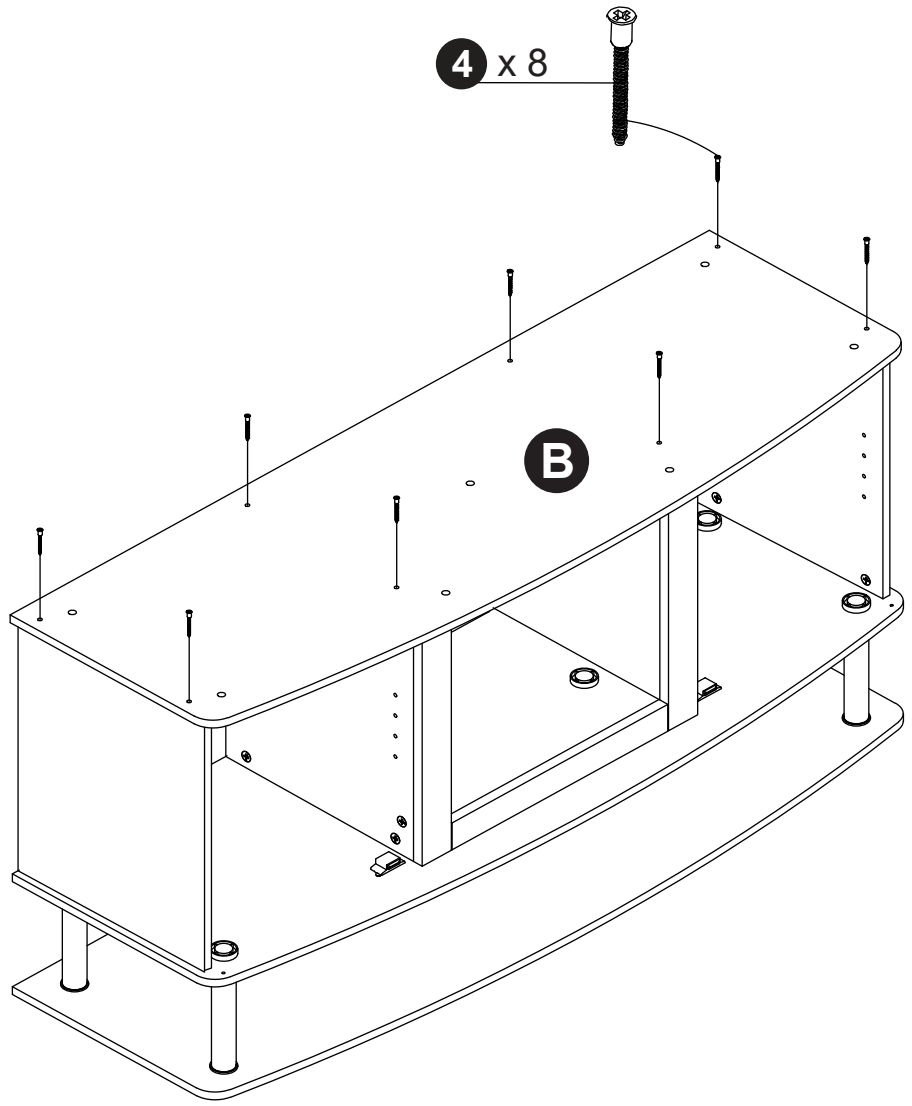




# 5

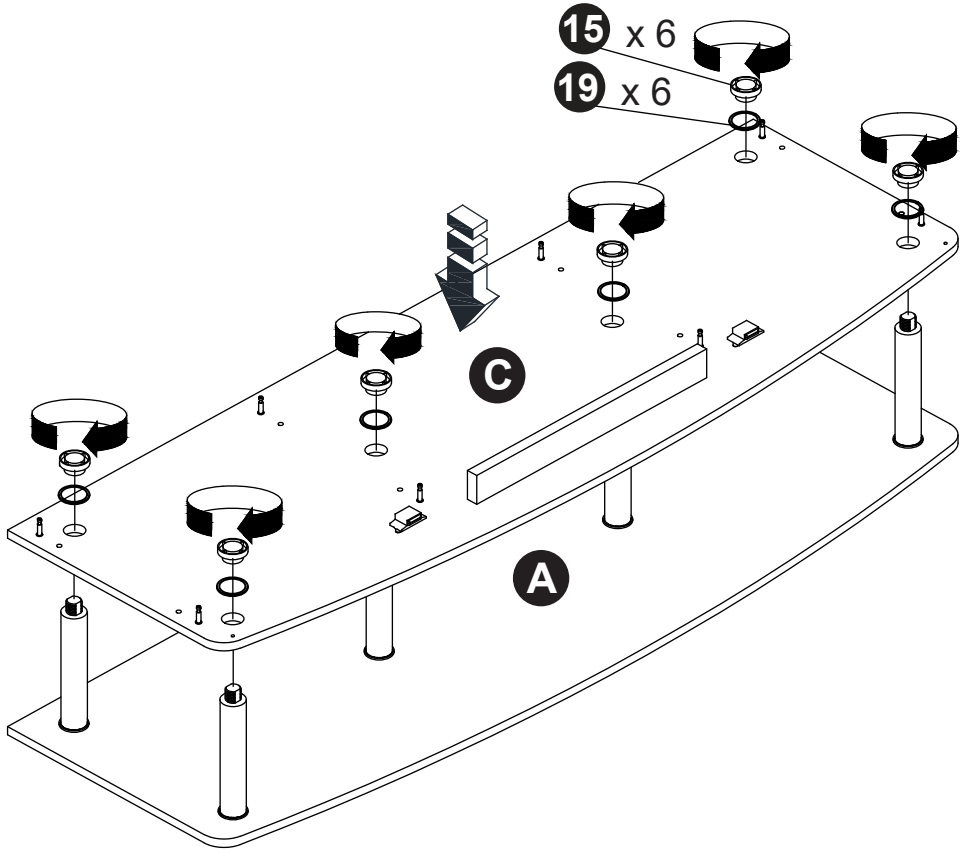

# 6

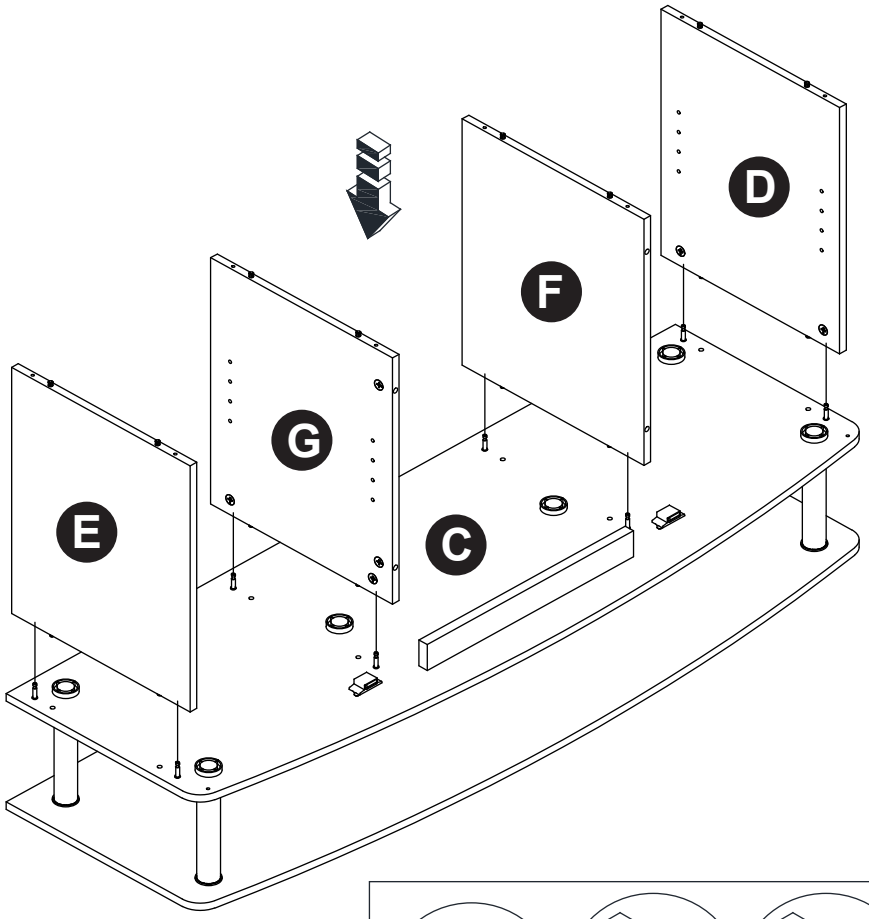


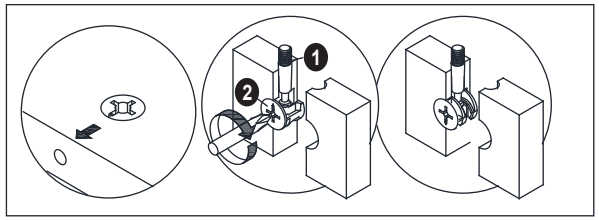




# 7

7.1

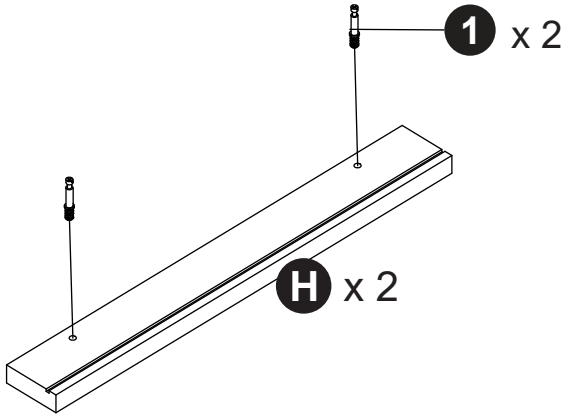


7.2

