11

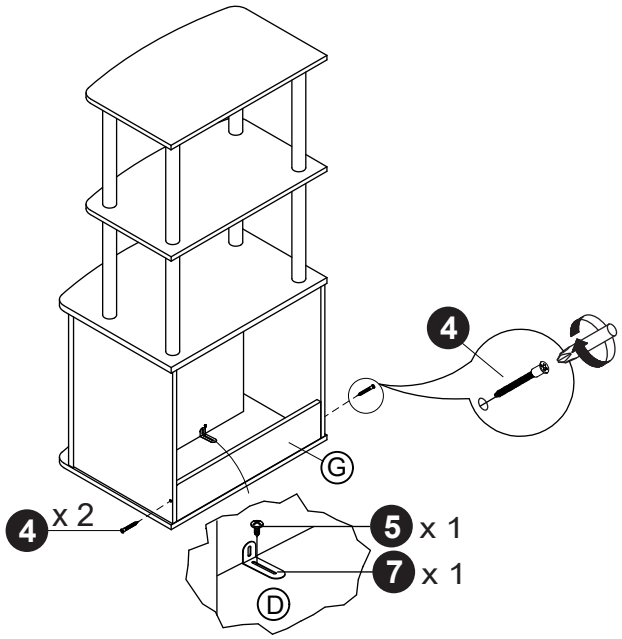

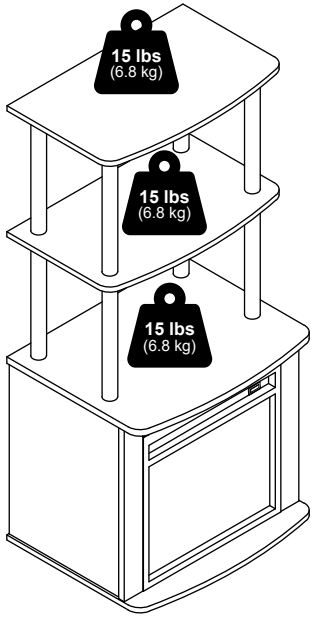

Furinno®

Fits Space, Fits Budget

00:30

x 1

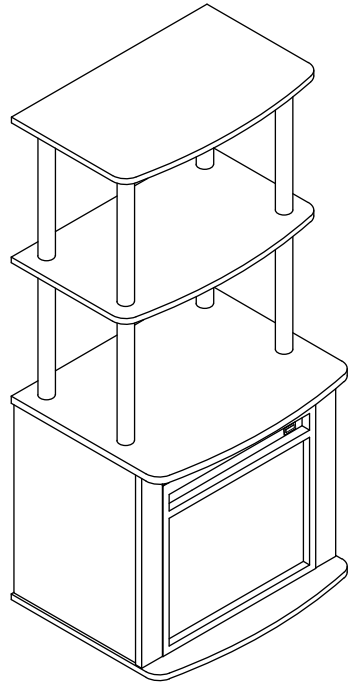

MODEL: 23361

support@furinno.com ***www.furinno.com***

2336120240424

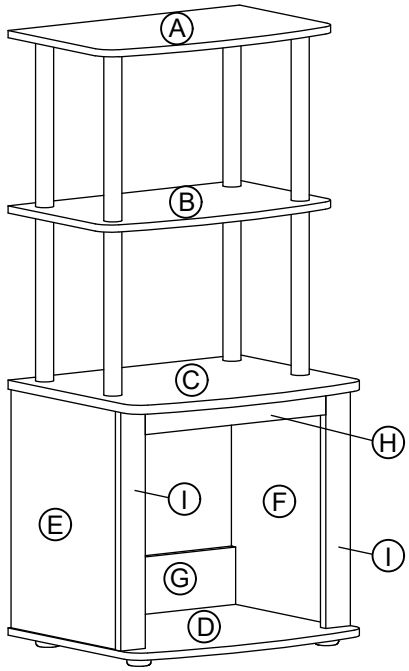

1 x 8 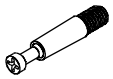 M6 x 31mm	**2** x 8  15mm	**3** x 8  M6 x 20mm	**4** x 6  M5 x 40mm
5 x 9  M4 x 11mm	**6** x 2 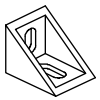 17 x 22mm	**7** x 1  1.2 x 24 x 90mm	**8** x 1 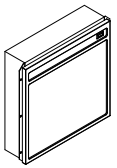
9 x 8 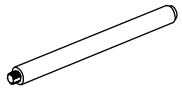 30 x 280mm	**10** x 4  Ø34 x 8mm	**11** x 4  34 x 2mm	**12** x 4  Ø40 x 14mm

9

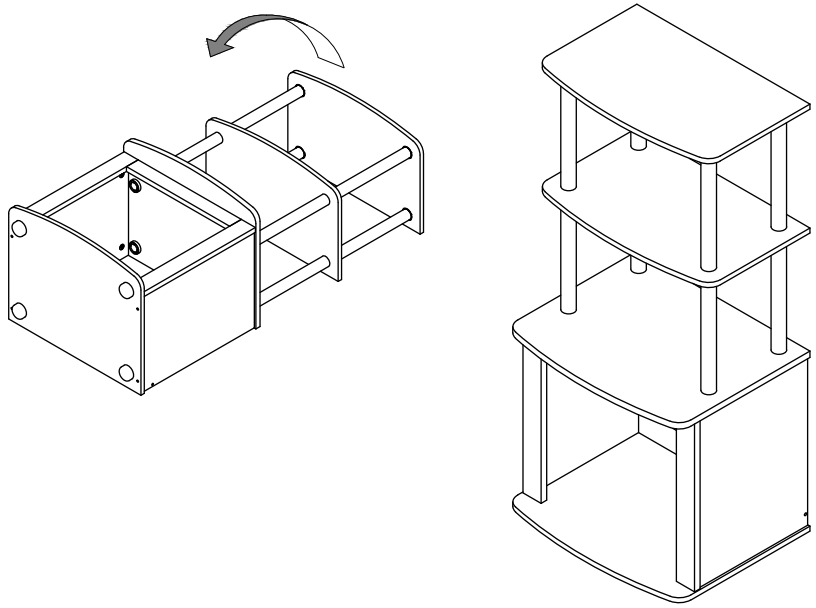

10

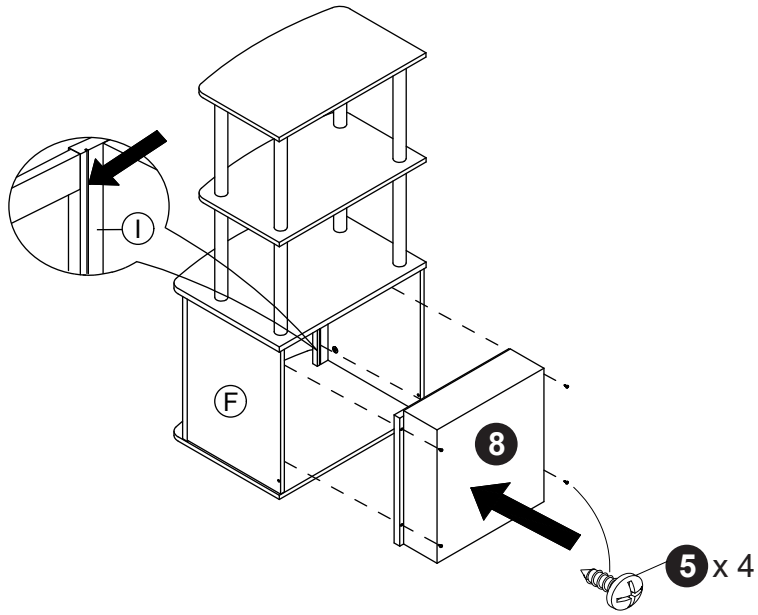

7

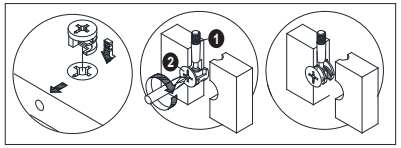

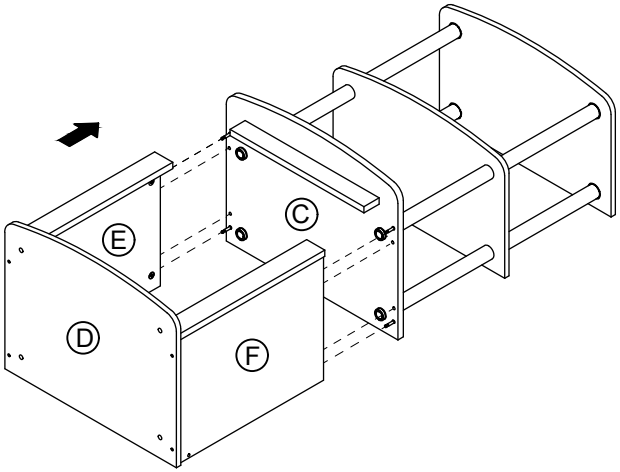

8

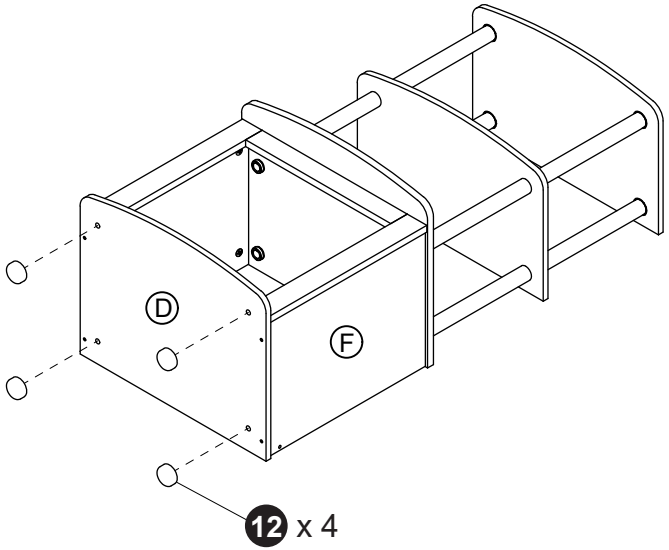

1

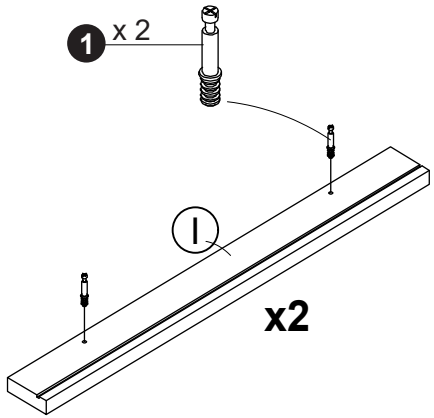

2

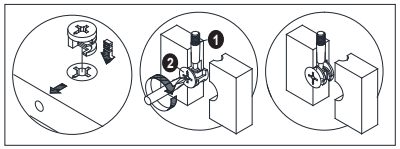

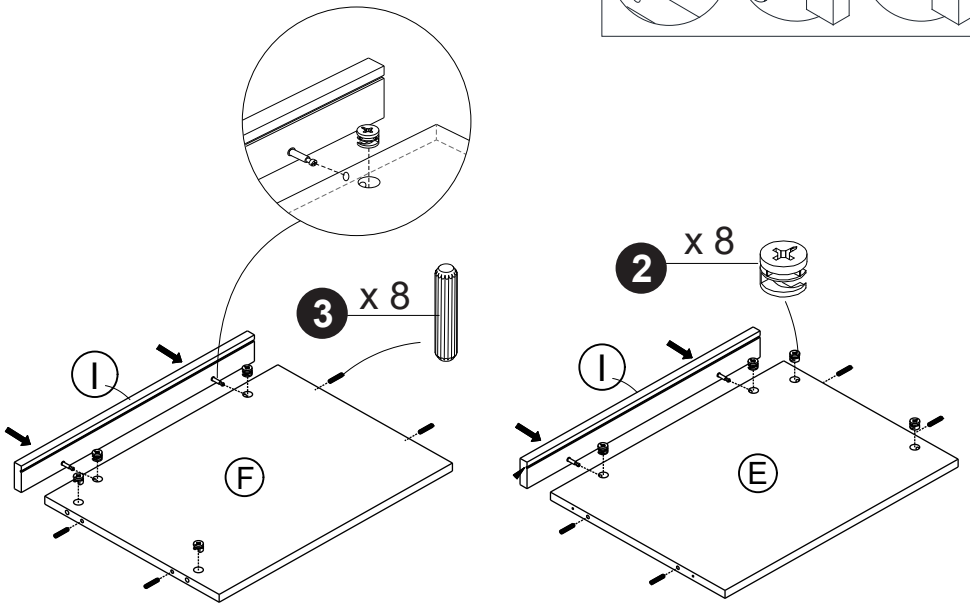

3

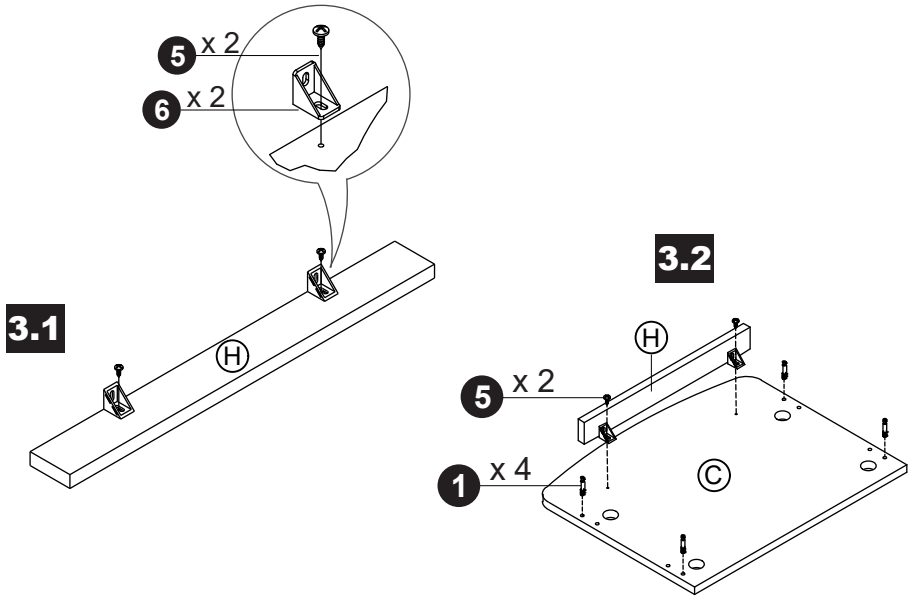

4

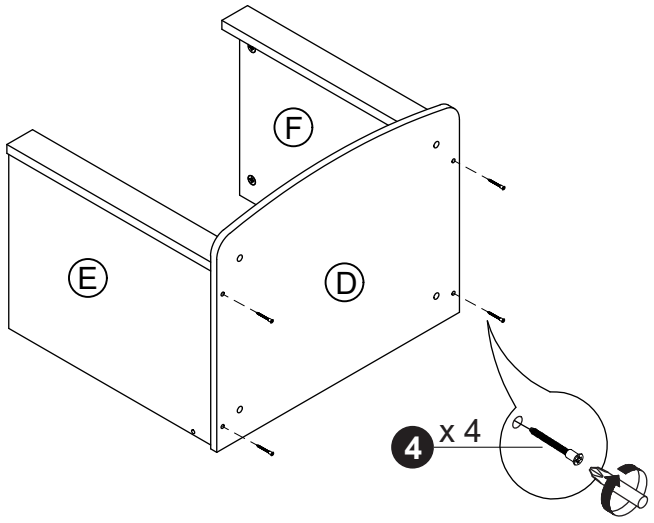

5

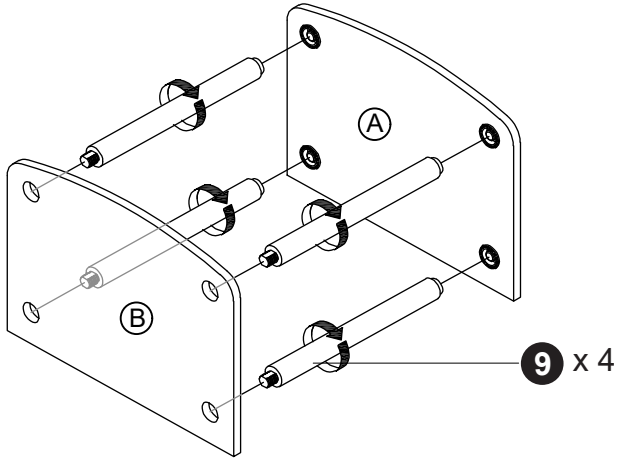

6

