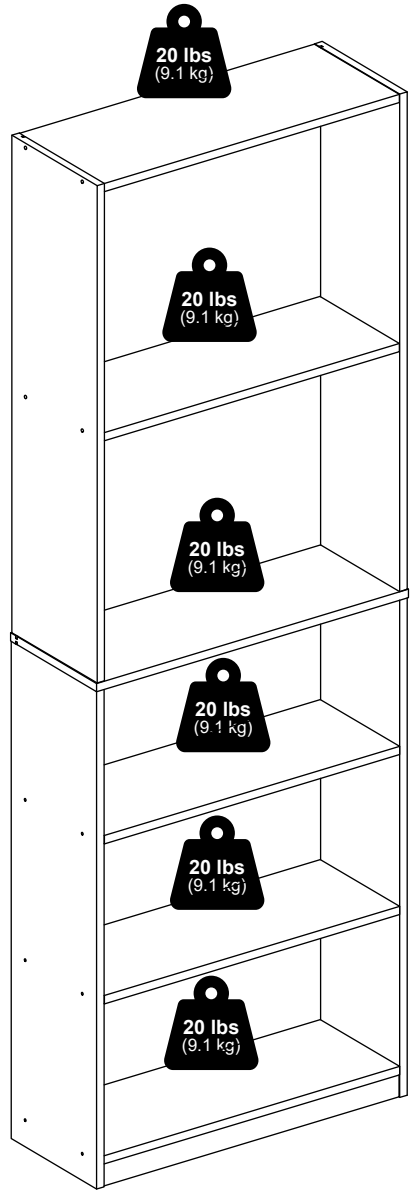





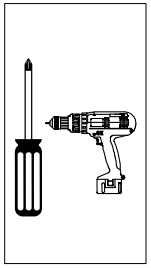

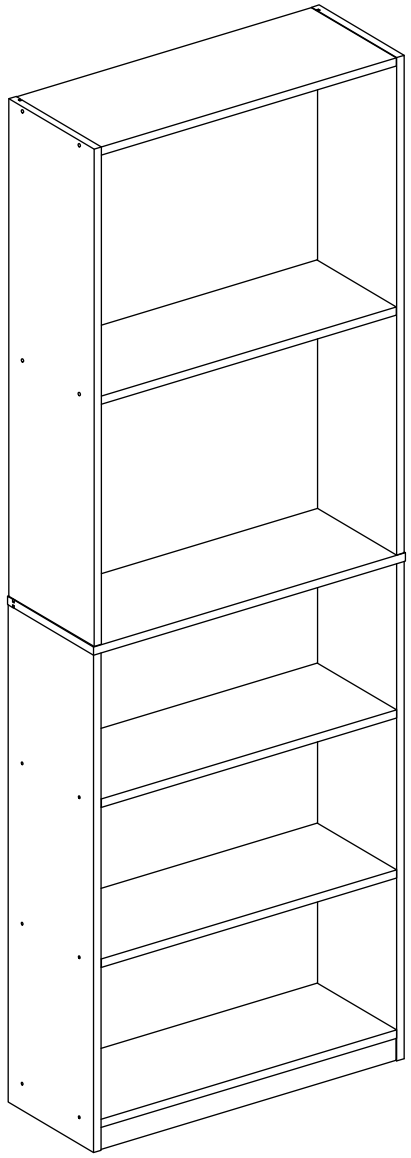

MODEL: 23375

2337520251014

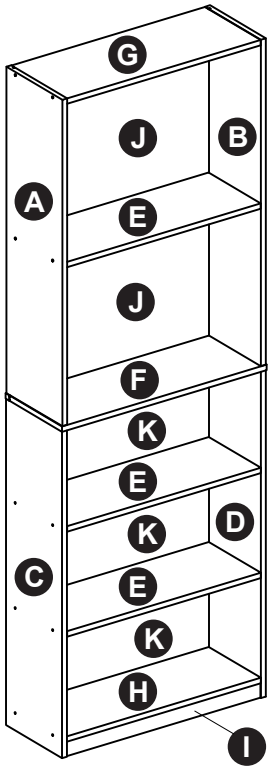

1 x 24  M4 x 38mm	2 x 4 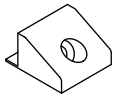	3 x 4  M4 x 16mm
4 x 4 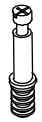	5 x 4 	6 x 4  M4 x 11mm
7 x 2 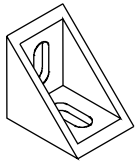	8 x 1 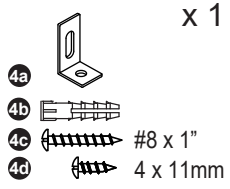 4a 4b 4c #8 x 1” 4d 4 x 11mm	

10

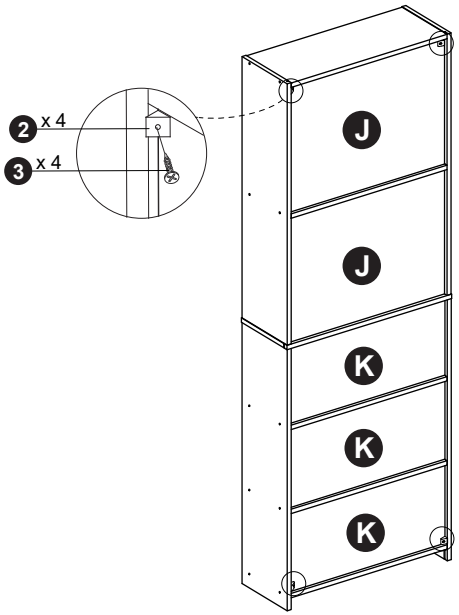

11

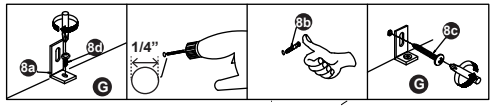

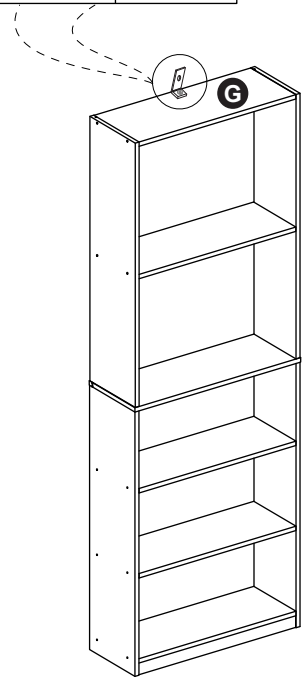

8

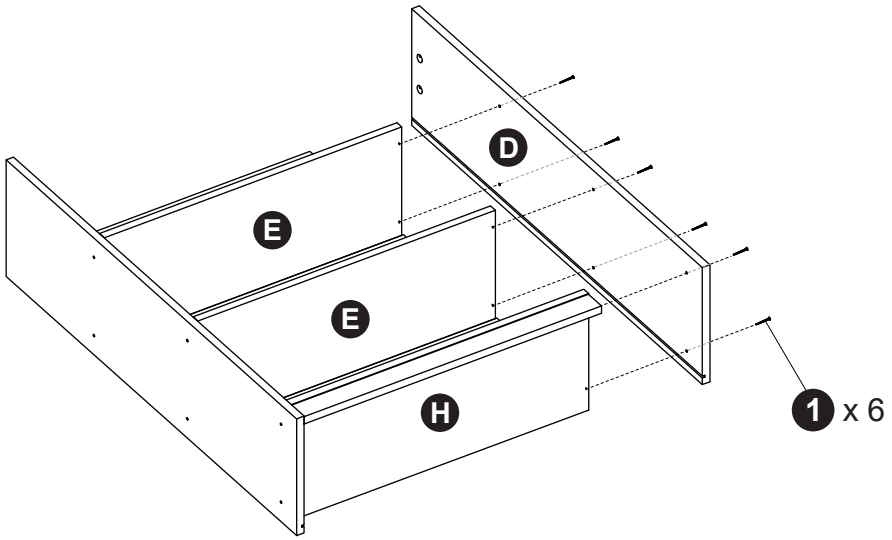

9

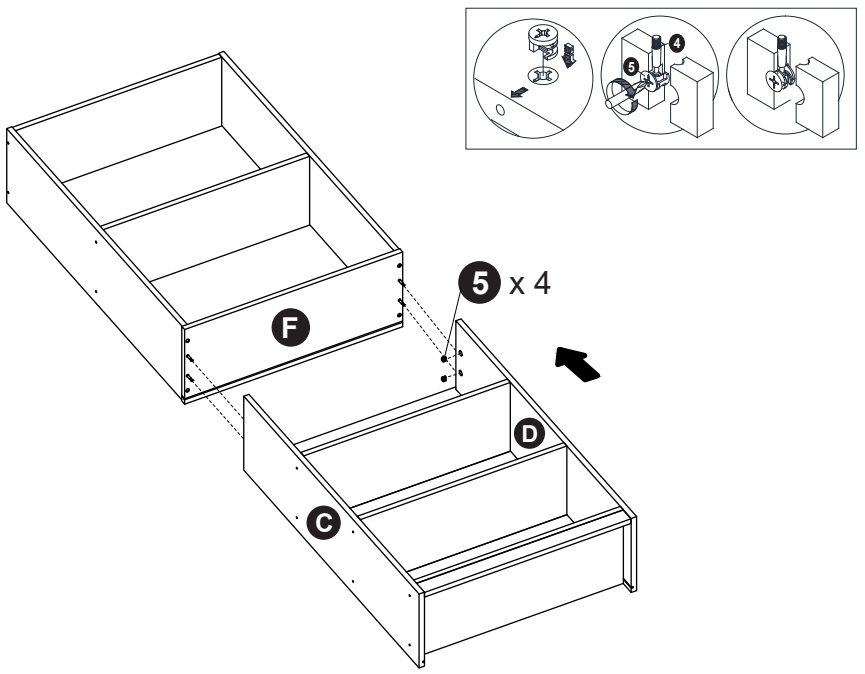

1

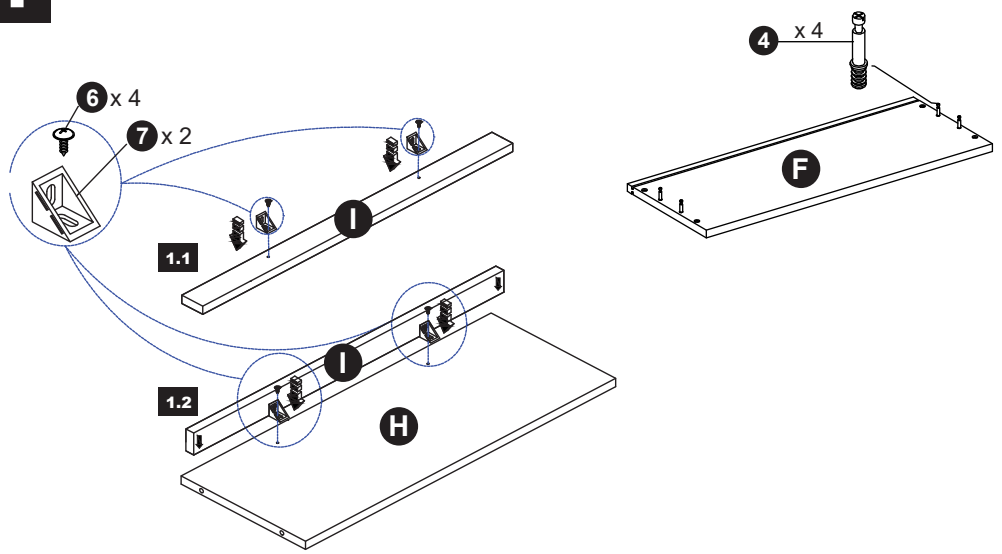

2

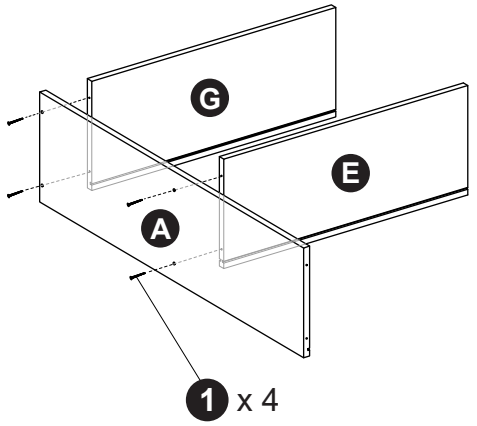

3

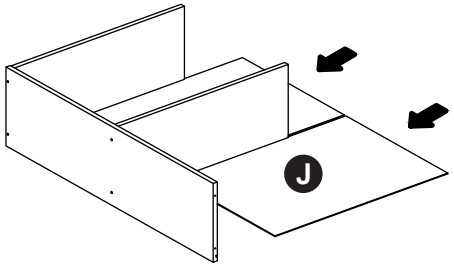

4

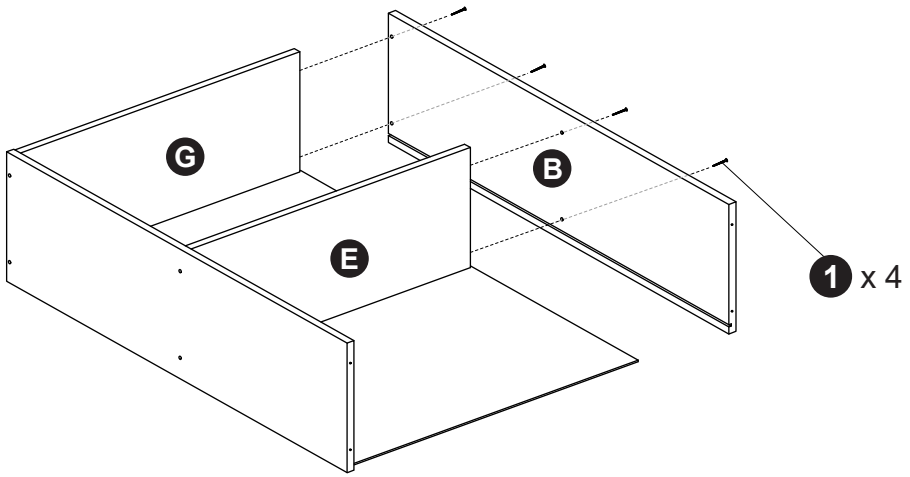

5

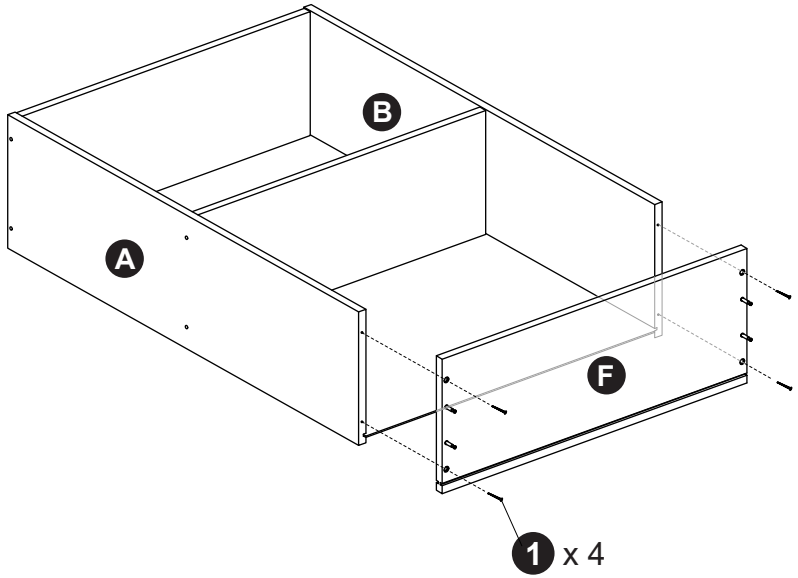

6

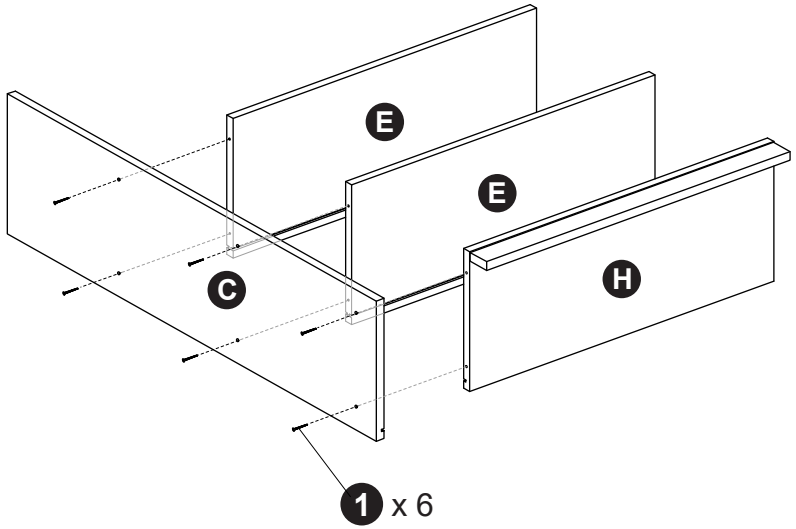

7

