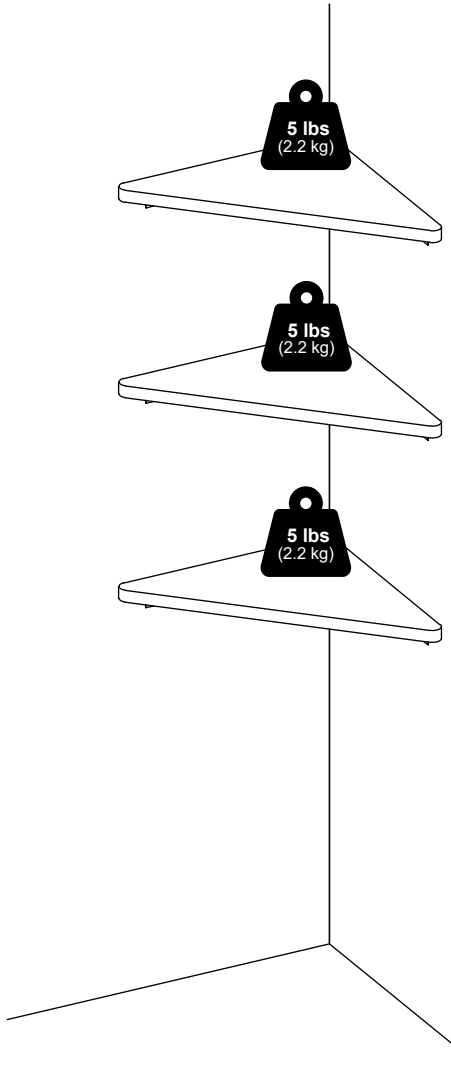

Furinno®

Fits Space, Fits Budget



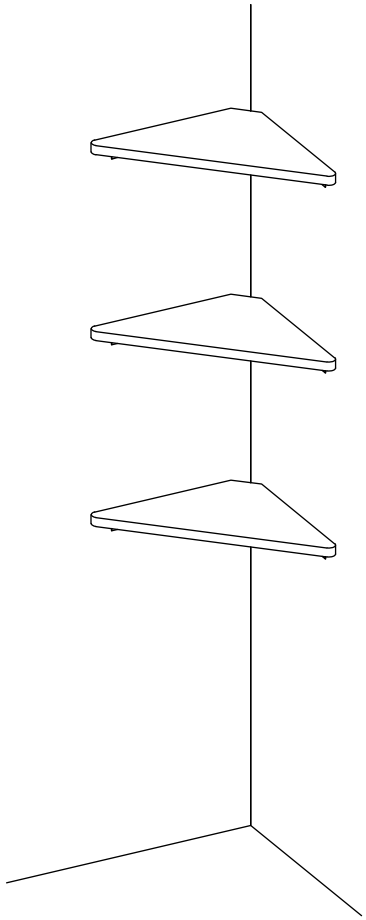

MODEL: 23408

support@furinno.com

www.furinno.com

2340820240208

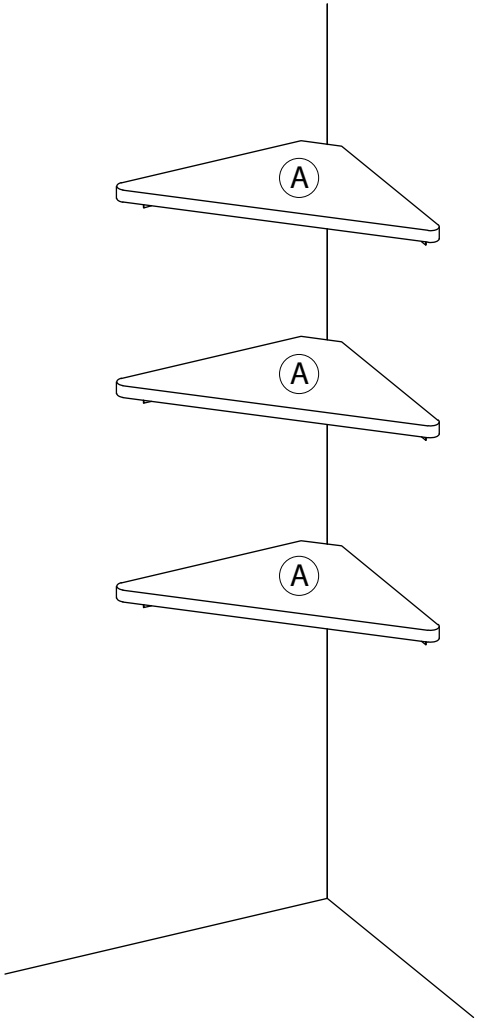

1 x 12	2 x 12	3 x 12	4 x 12
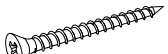		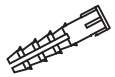	 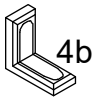
M4 x 32mm	M4 x 11mm	M6 x 32mm	4a 4b

1

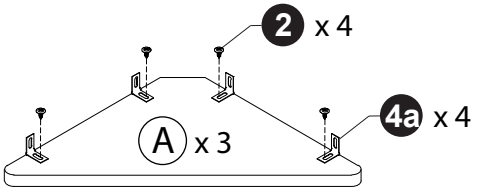

2

