8

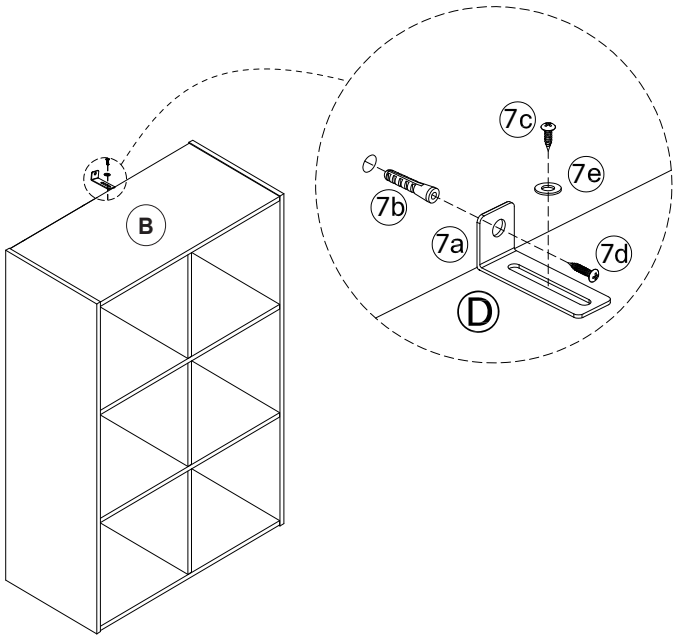

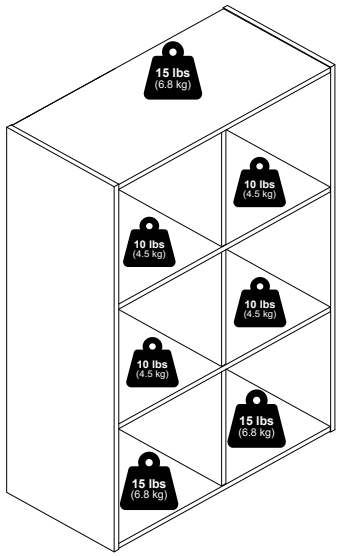

Furinno®

Fits Space, Fits Budget



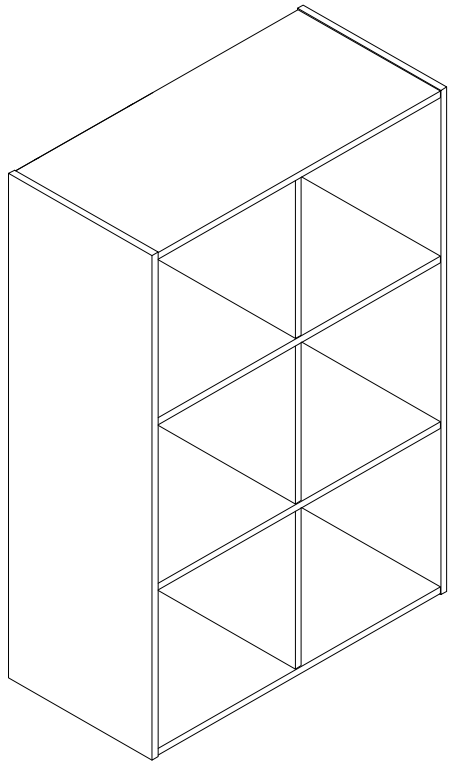

MODEL: 24004

support@furinno.com

www.furinno.com

2400420240625

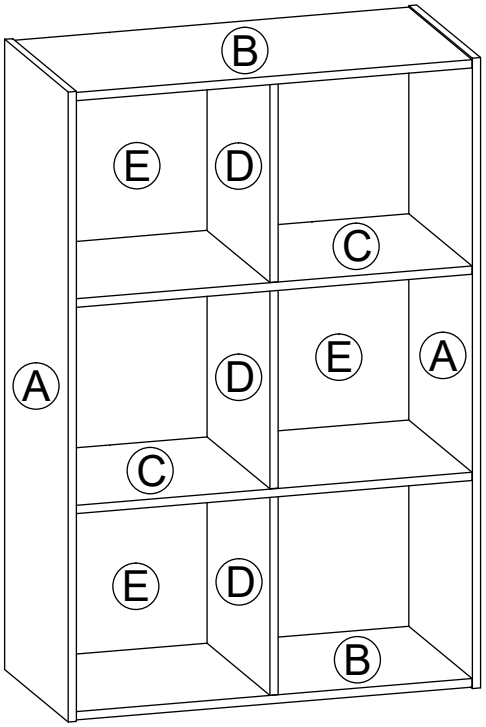

1 x 16  M4 x 38mm	**2** x 24 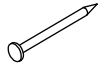 4 x 18mm	**3** x 12 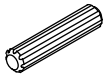 M5 x 30mm	**4** x 4 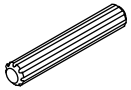 M5 x 50mm
5 x 16  12mm	**6** x 1 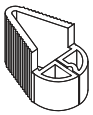	**7** x 1 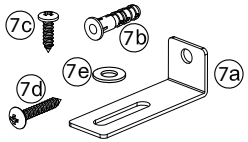	

7

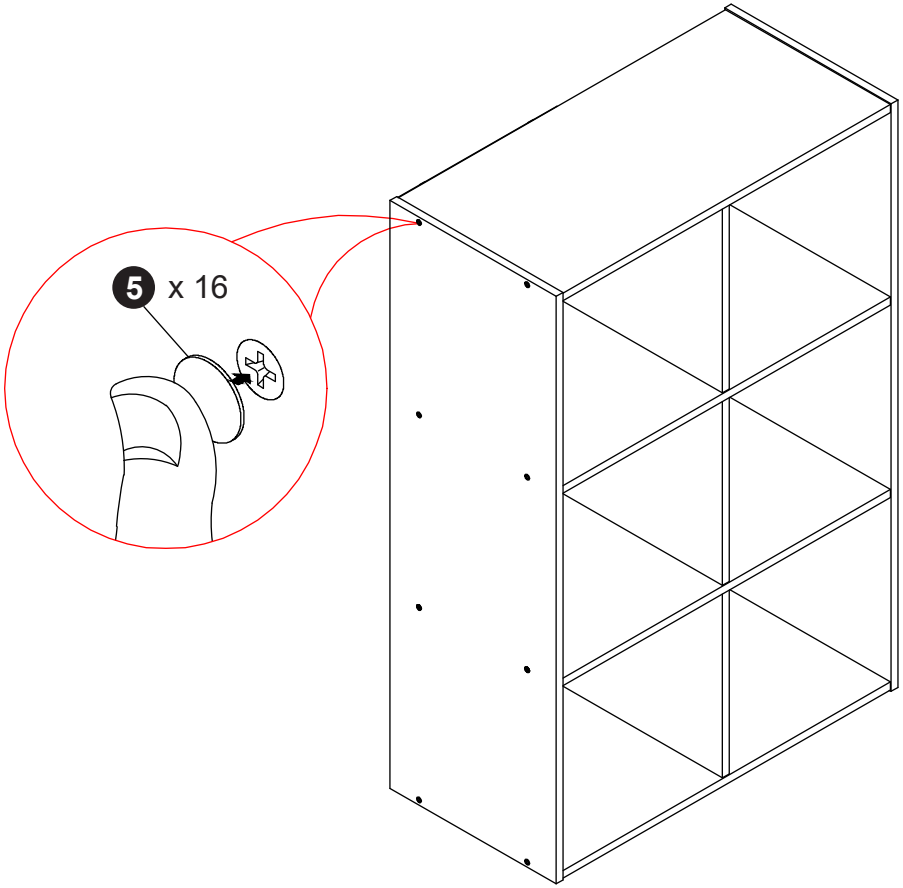

5

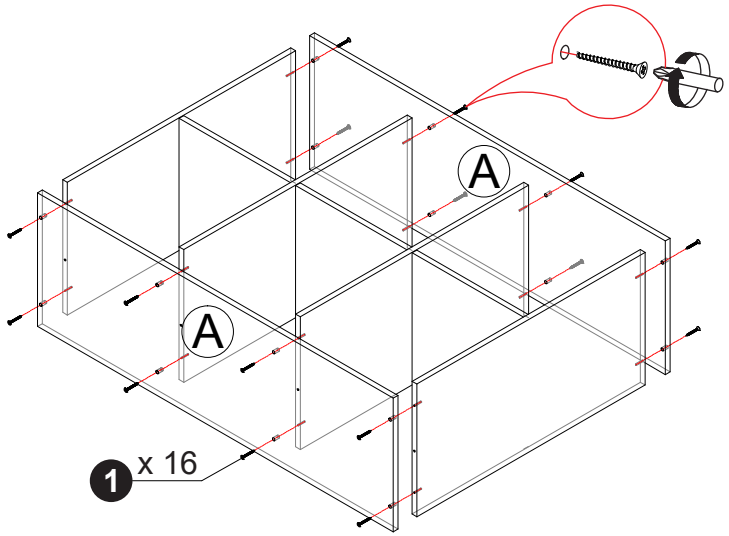

6

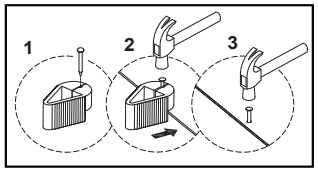

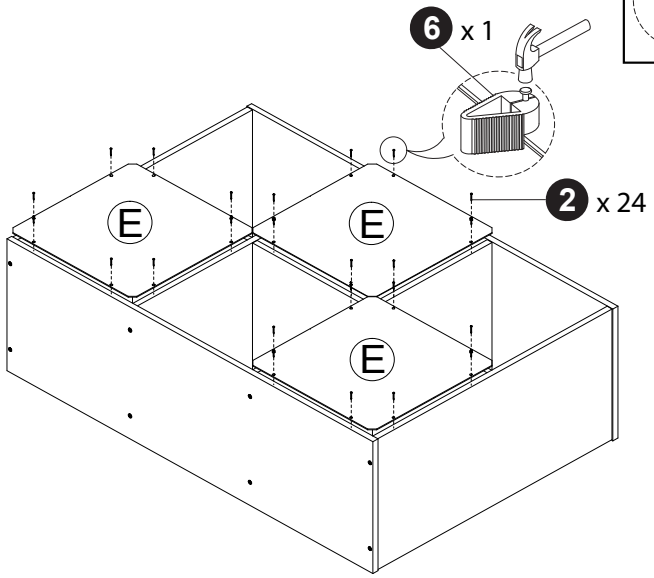

1

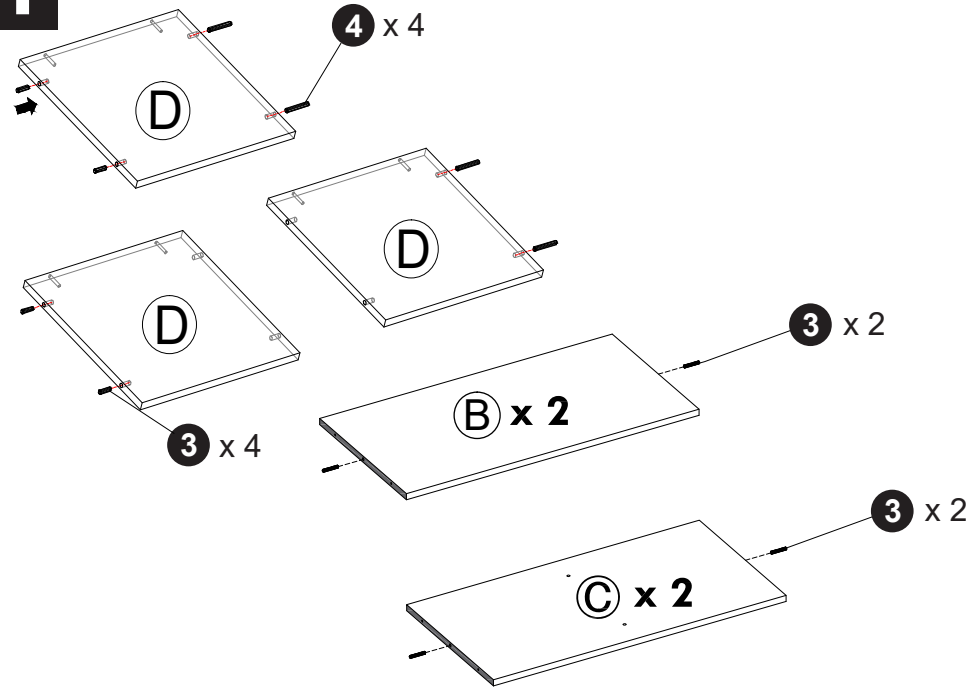

2

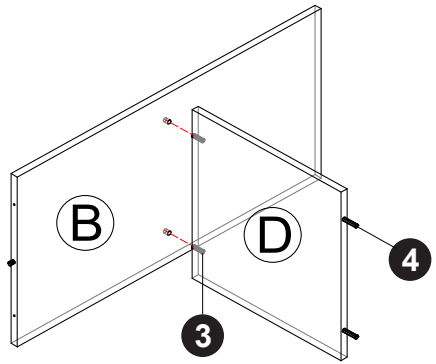

3

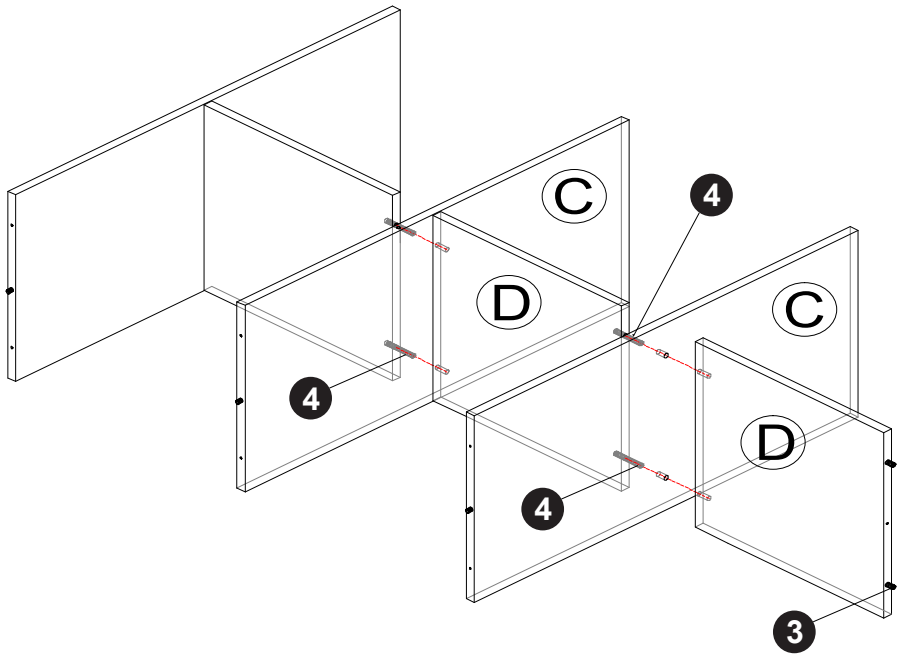

4

