5

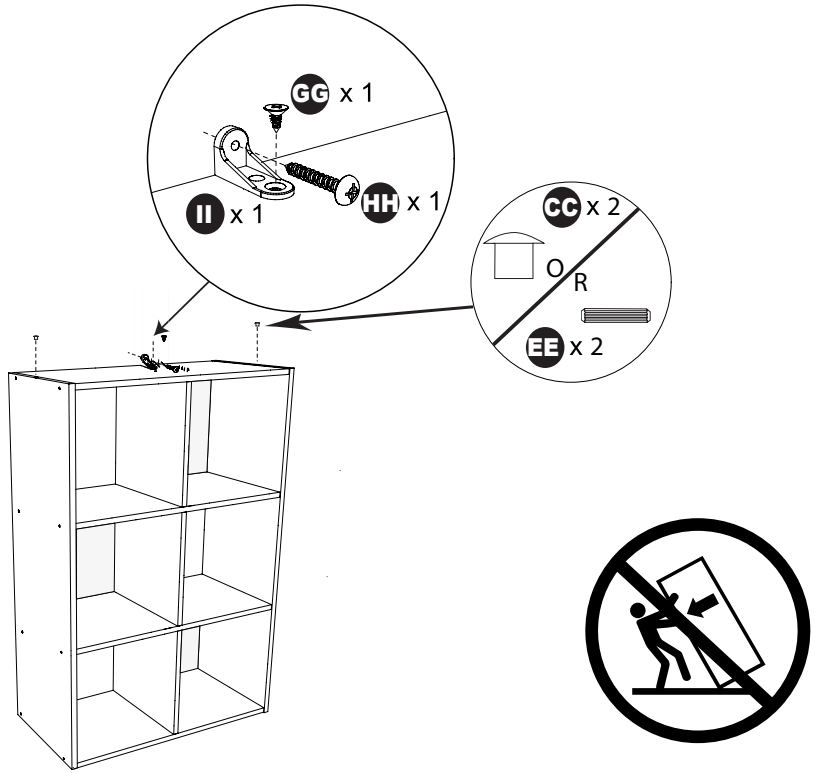

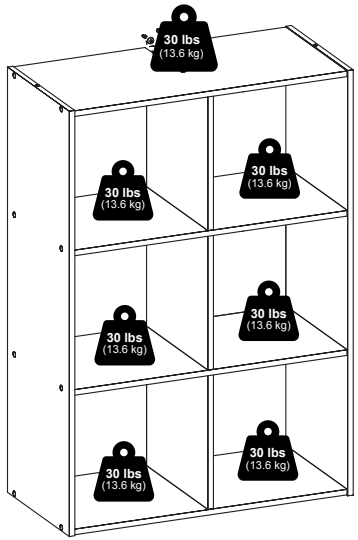

Furinno®

Fits Space, Fits Budget





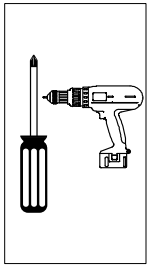

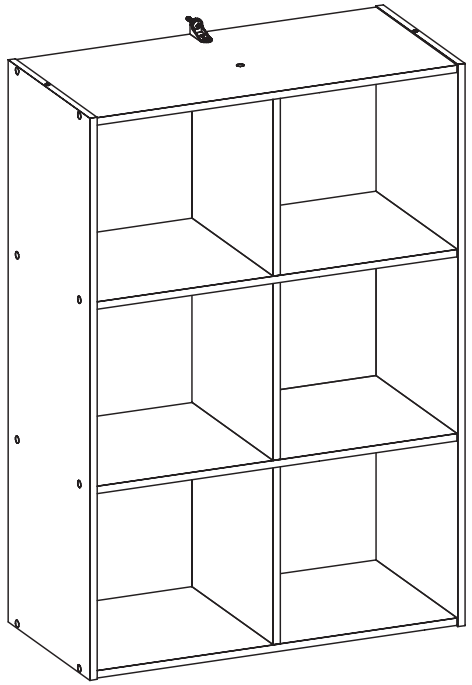

MODEL: 24004R1

support@furinno.com

www.furinno.com

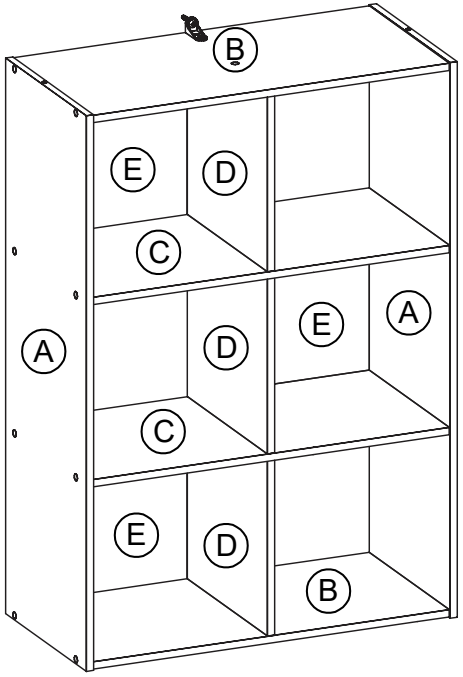

AA x 18  5 x 38mm	**BB** x 18 	**CC** x 2 
DD x 4  6 x 60mm	**EE** x 6  6 x 30mm	**FF** x 36 
GG x 1  5 x 13mm	**HH** x 1  5 x 38mm	**II** x 1 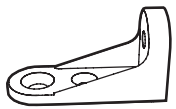

1

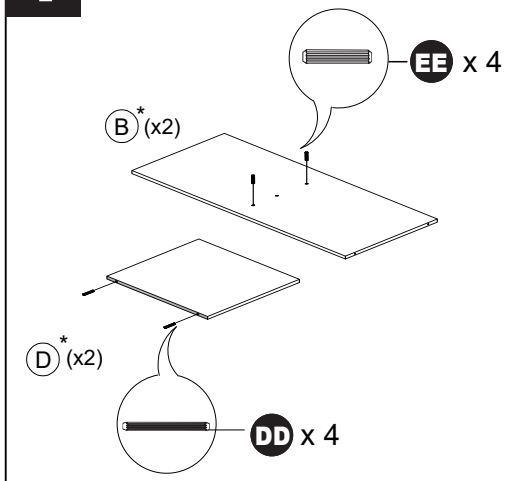

2

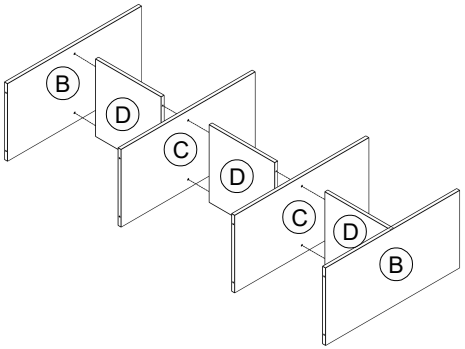

3

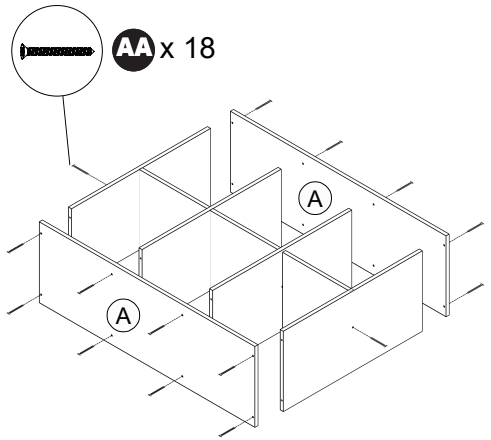

4

