Furinno®

Fits Space, Fits Budget



00:20

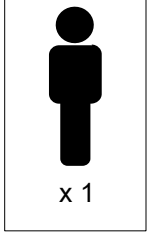

x 1

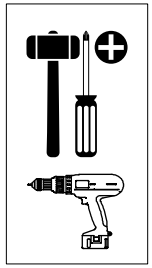

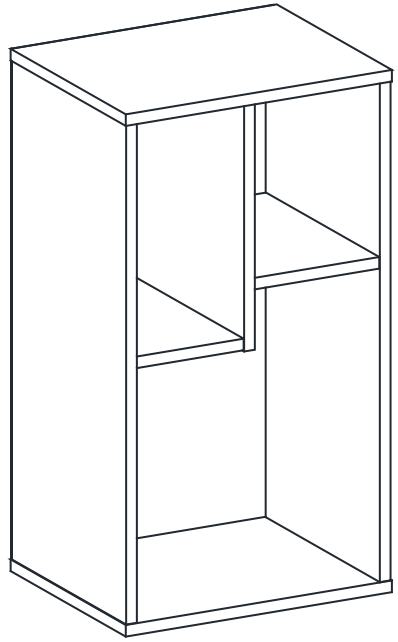

MODEL: 24008

support@furinno.com

www.furinno.com

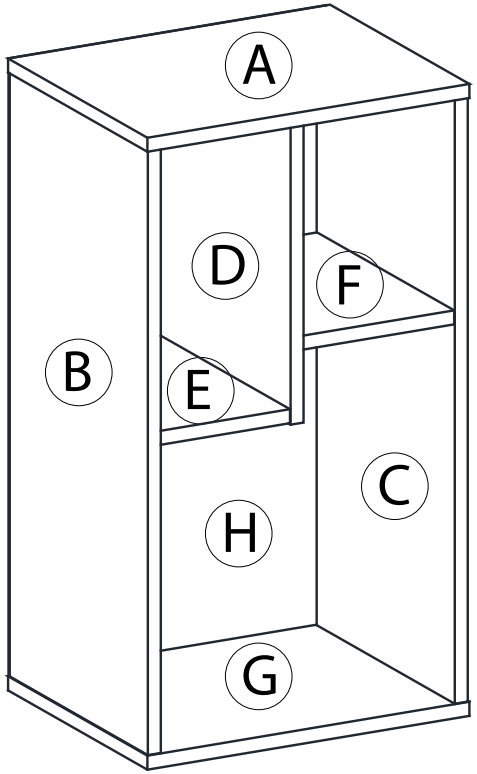

1 x 6 1a 15mm 1b M6 x 31mm	**2** x 12 M4 x 32mm	**3** x 24 4 x 20mm	**4** x 1
5 x 4 10mm			

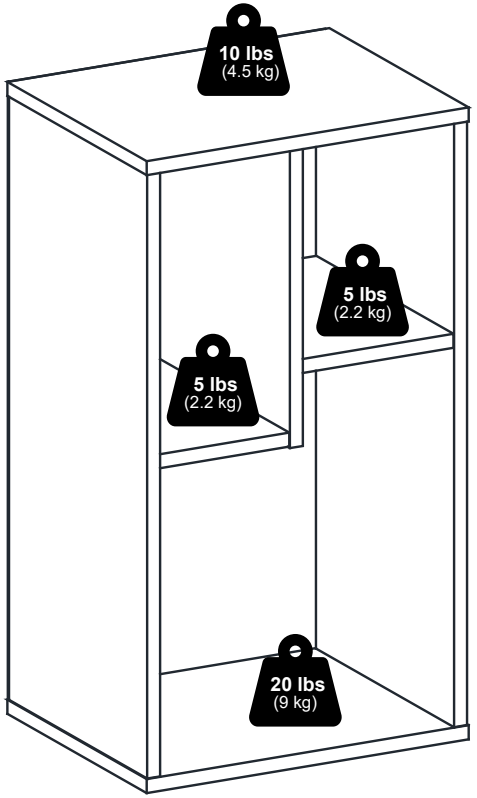

7

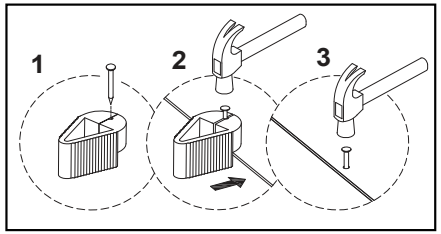

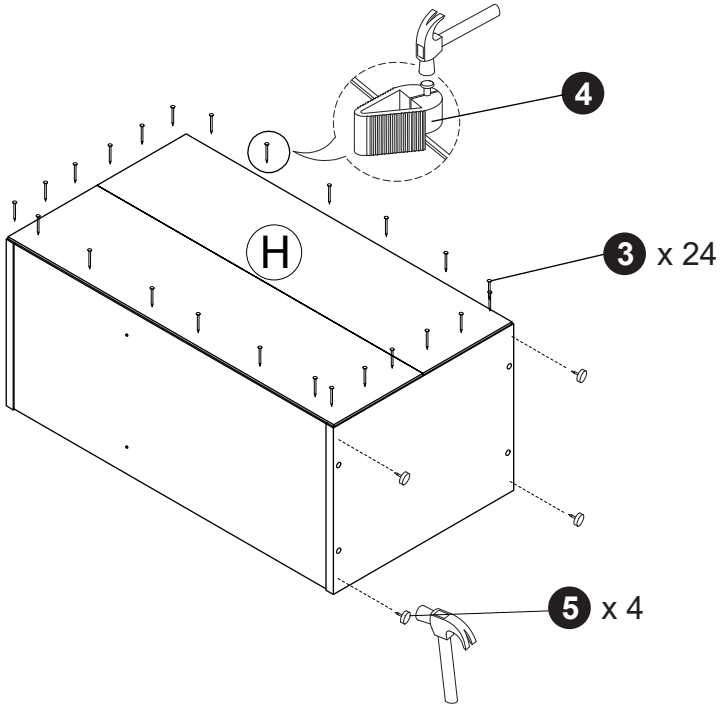

1

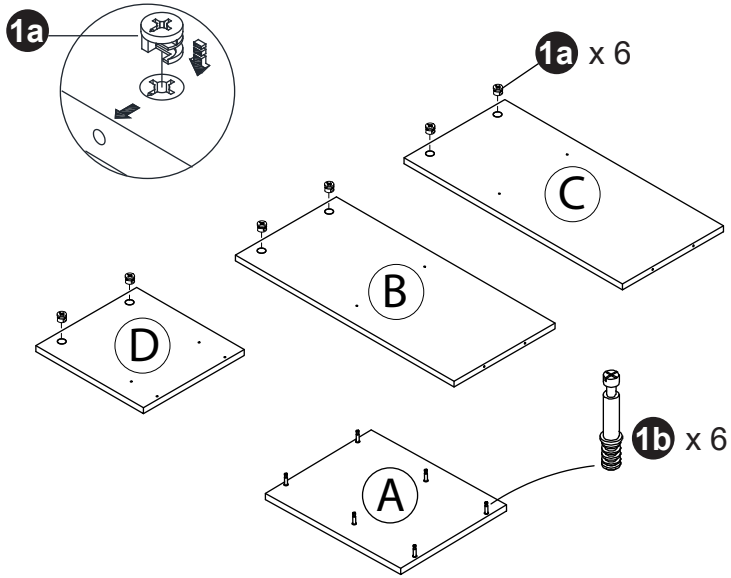

2

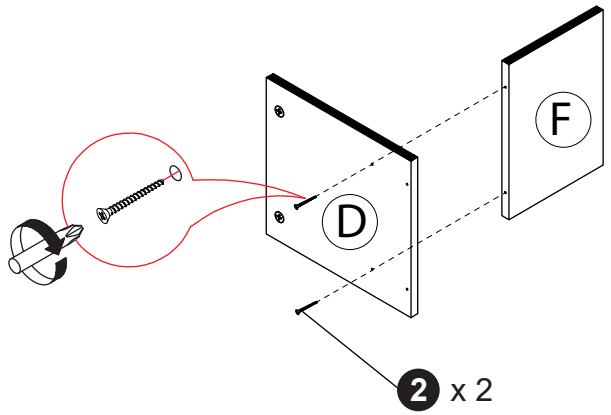

3

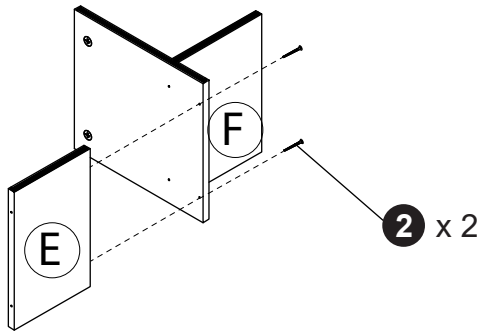

4

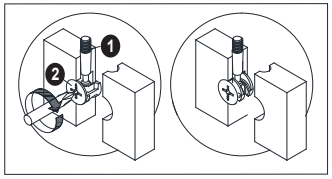

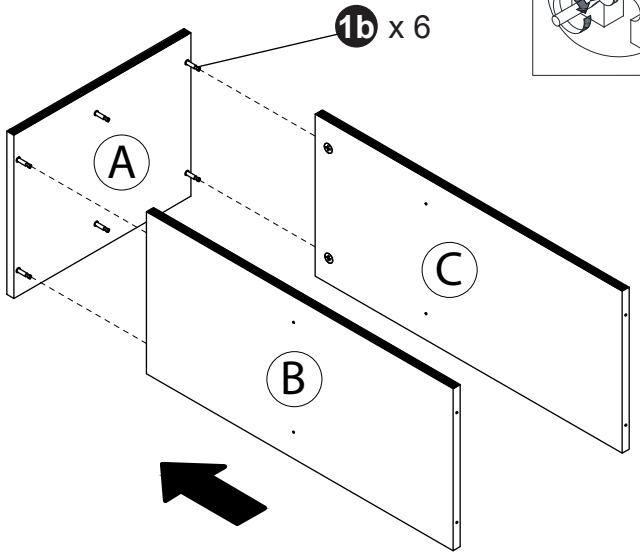

5

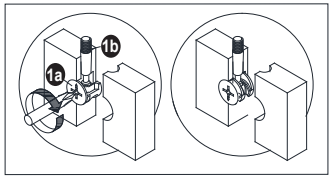

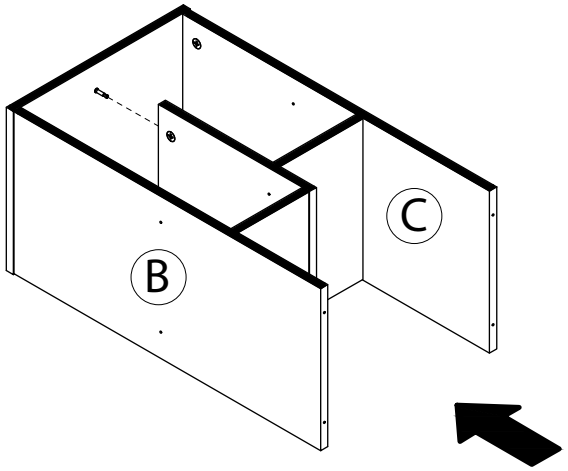

6

