

Furinno®

Fits Space, Fits Budget

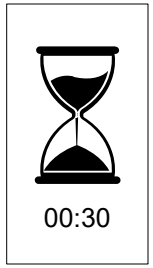



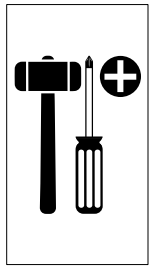

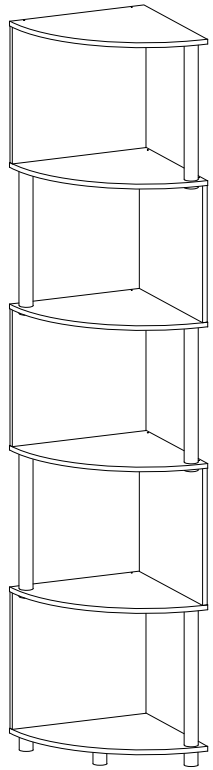

MODEL: 24014

support@furinno.com

www.furinno.com

2401420240419

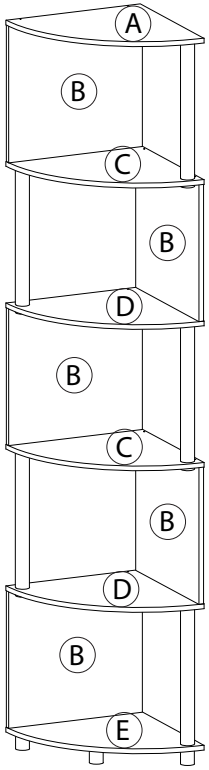

1 x 20  M4 x 32mm	**2** x 5 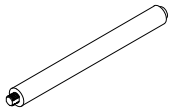 Ø34 x 340mm	**3** x 4  34 x 38mm
4 x 4  Ø34 x 8mm	**5** x 1 5a 16 x 28mm 5b 1 1/4” 5c #8 x 1” 5d 4 x 11mm	**6** x 1  34 x 2mm

10

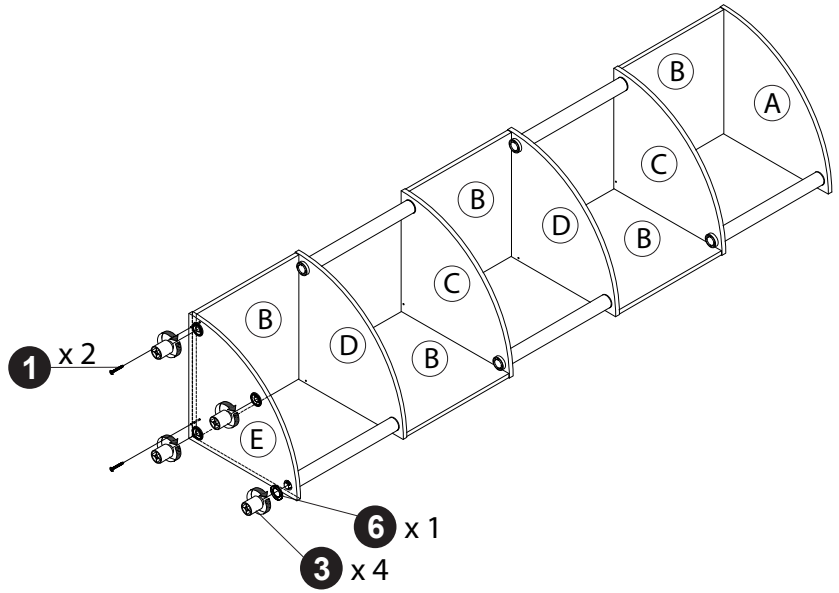

11

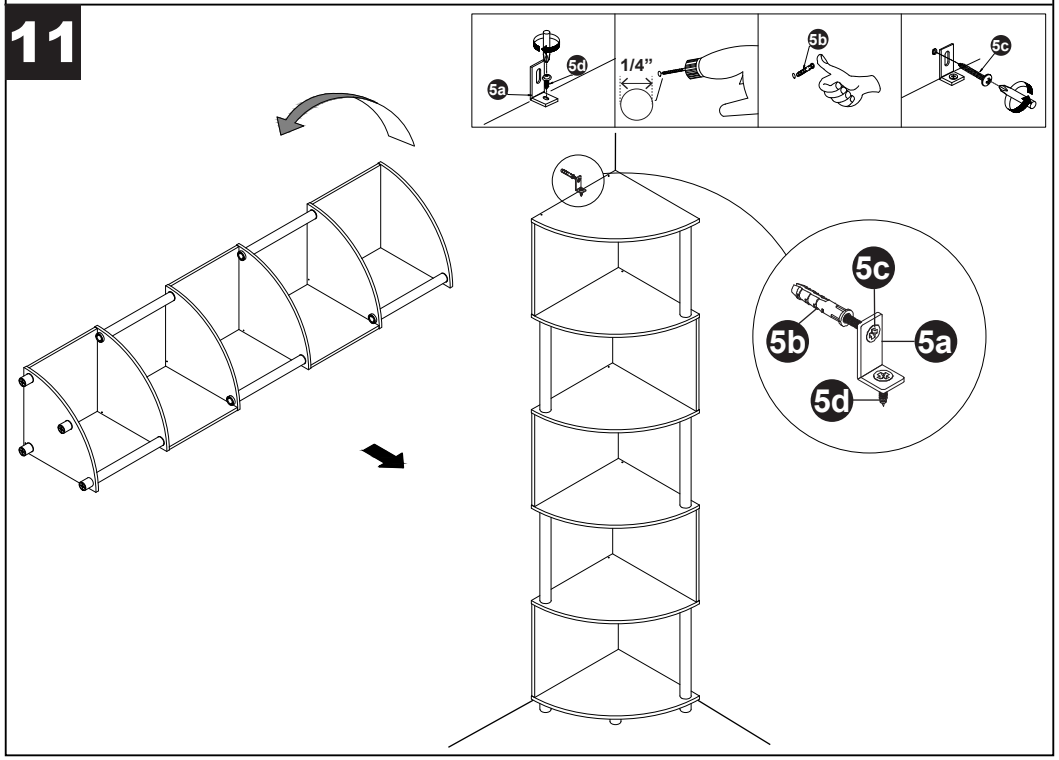

8

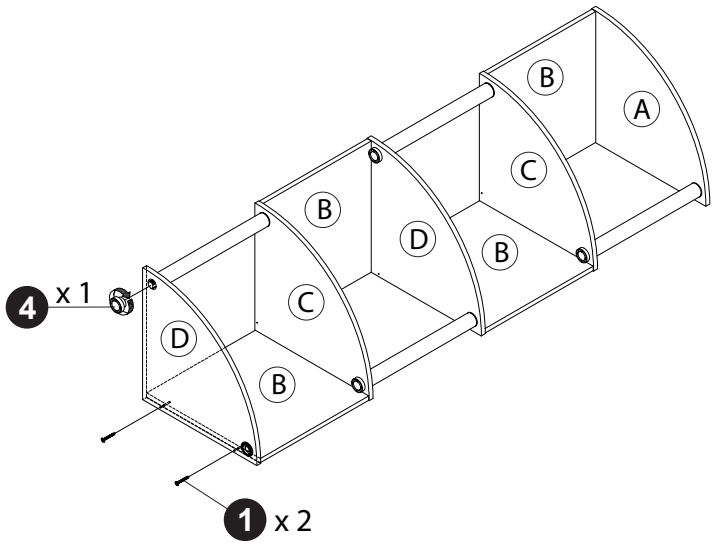
B
A
C
B
D
B
4 x 1
C
D
B
1 x 2

9

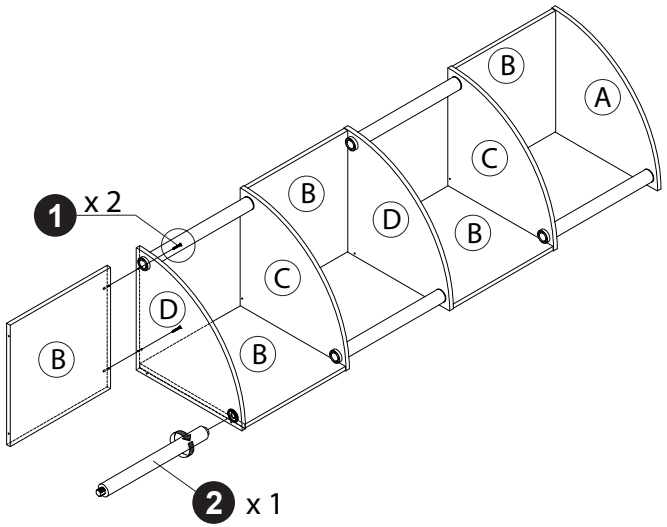
B
A
C
B
D
B
1 x 2
C
D
B
B
2 x 1

1

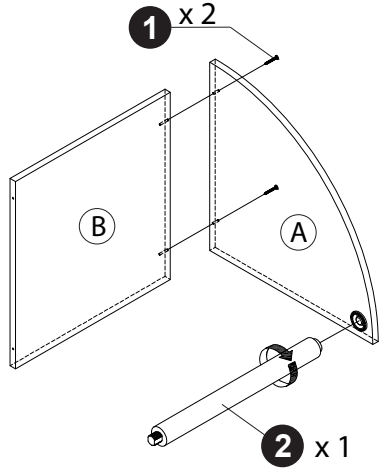
1 x 2
B
A
2 x 1

2

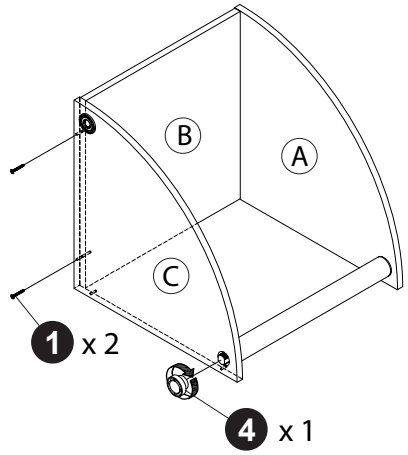
B
A
C
1 x 2
4 x 1

3

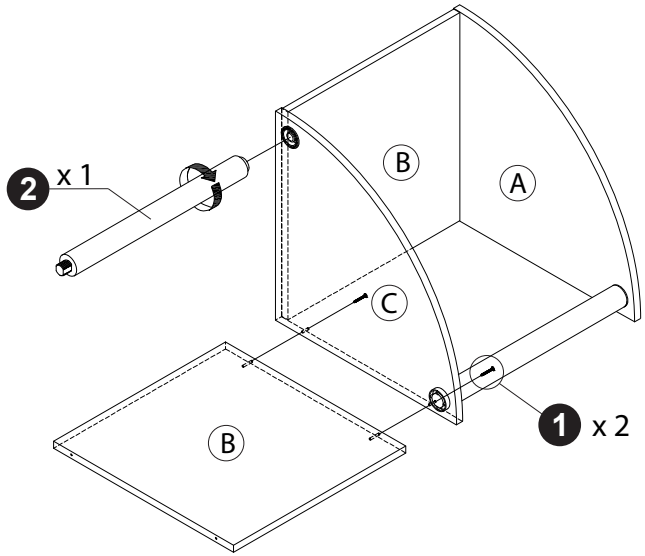
2 x 1
B
A
C
B
1 x 2

4

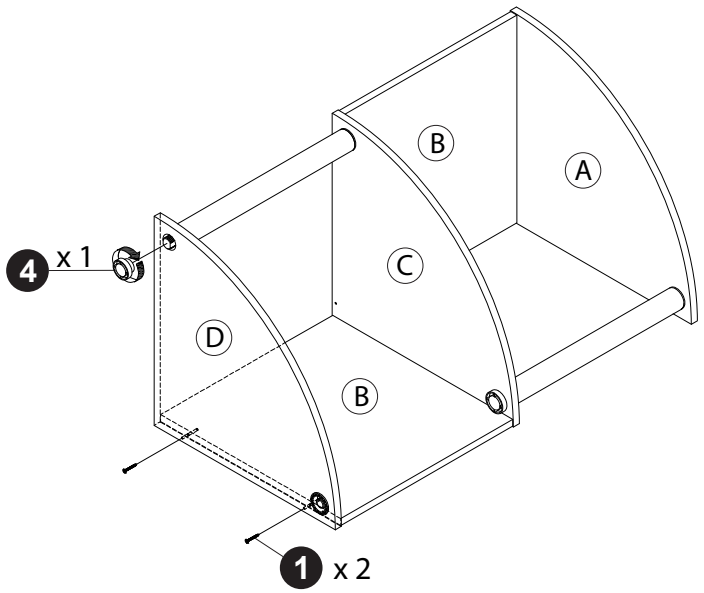
B
A
C
4 x 1
D
B
1 x 2

5

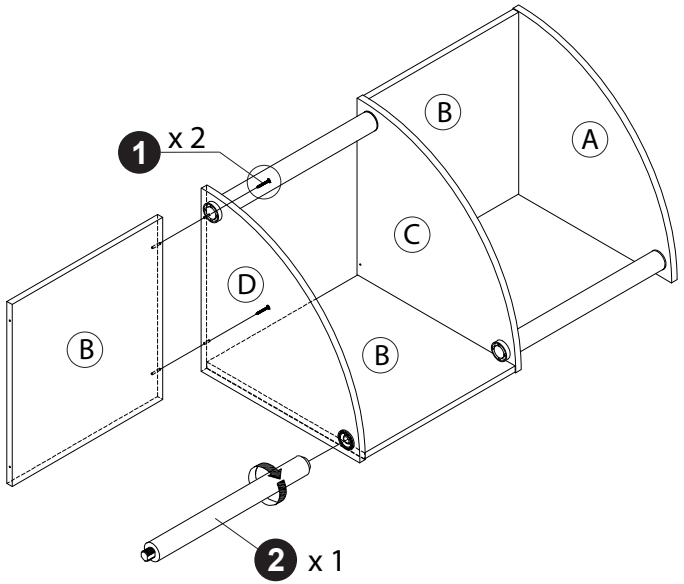
1 x 2
B
A
C
D
B
B
2 x 1

6

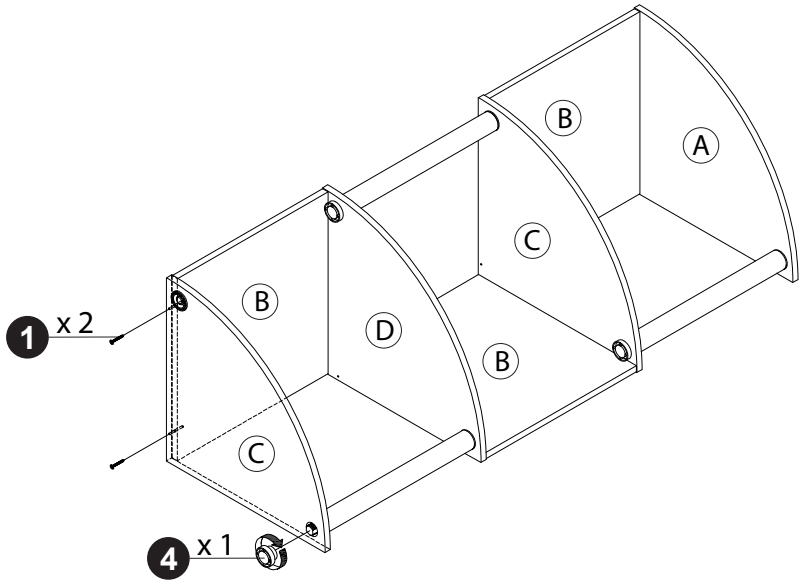
B
A
C
1 x 2
B
D
B
C
4 x 1

7

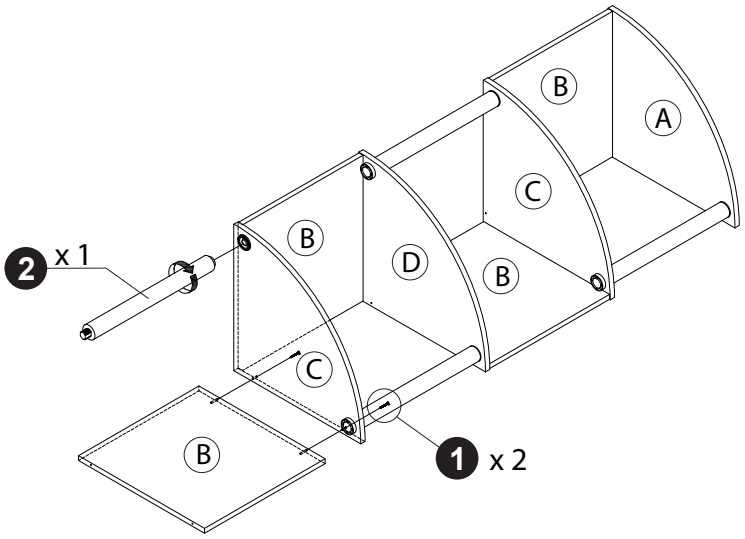
B
A
C
2 x 1
B
D
B
C
B
1 x 2