11

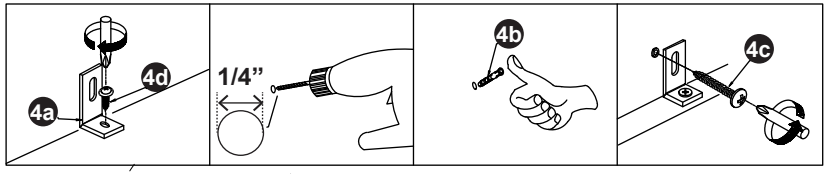

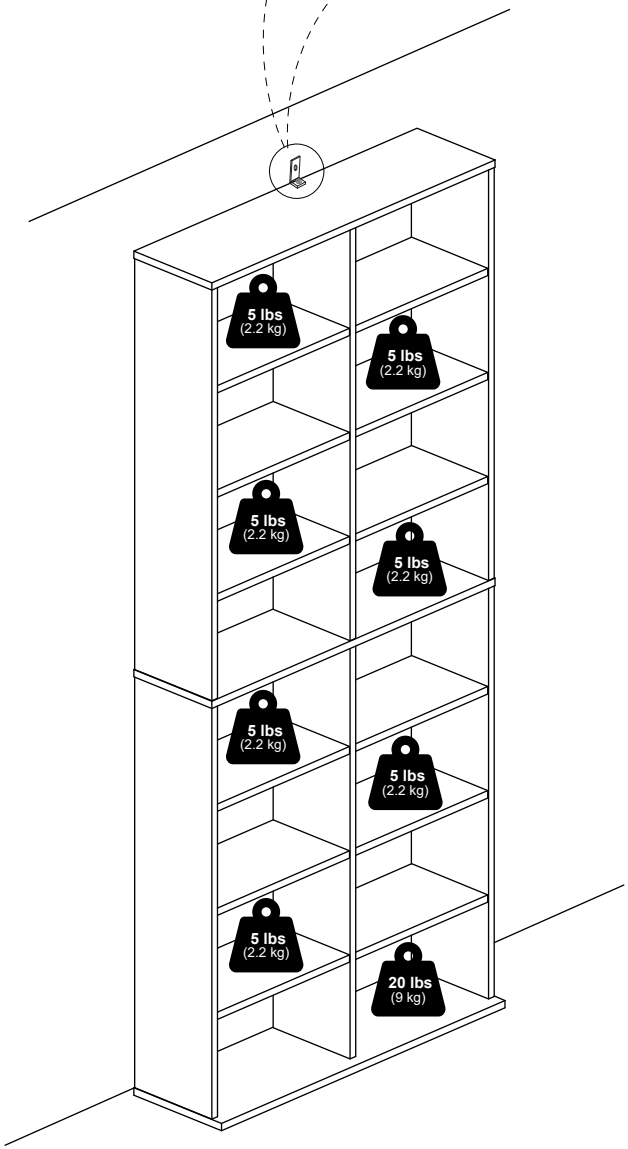

Furinno®

Fits Space, Fits Budget



00:45



x 2

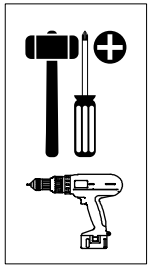

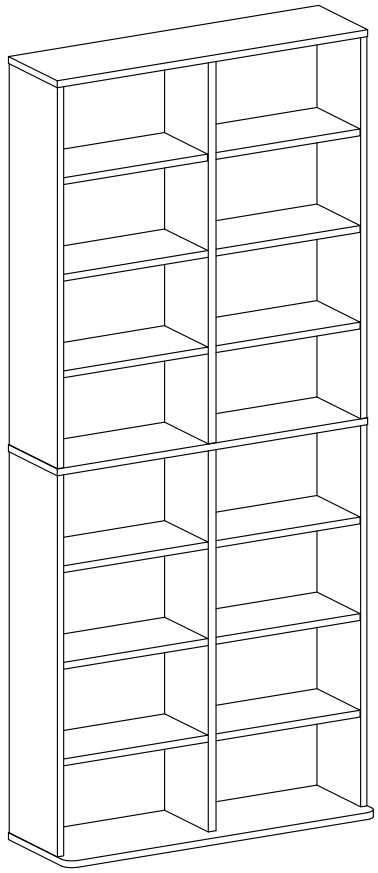

MODEL: 24067

support@furinno.com ***www.furinno.com***

2406720240620

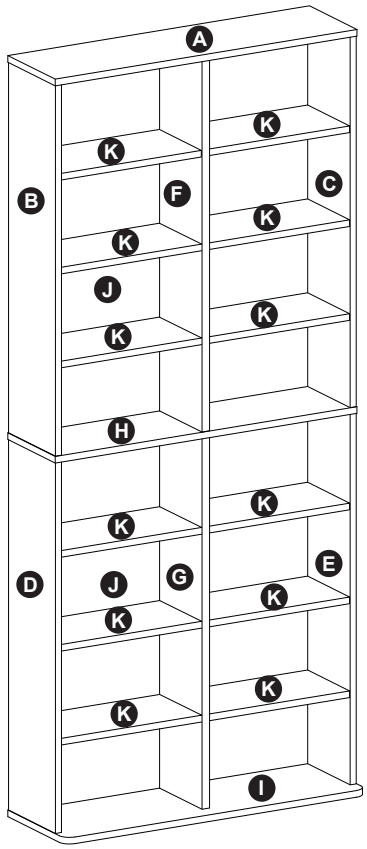

1 x 12 1a  1b  M6 x 31mm 15mm	**2** x 12  M4 x 32mm	**3** x 48  M6 x 12mm
4 x 1 4a 16 x 28mm 4b 1/1/4” 4c #8 x 1” 4d 4 x 11mm	**5** x 4 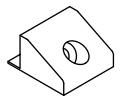	**6** x 4  M3.5 x 12mm

9

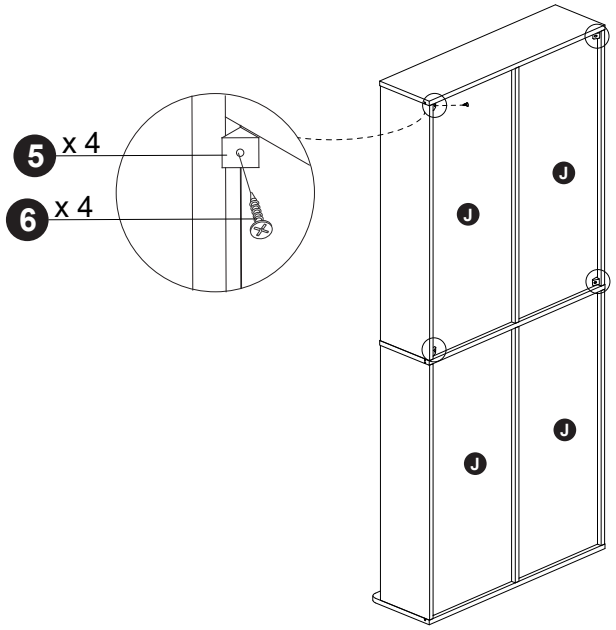

10

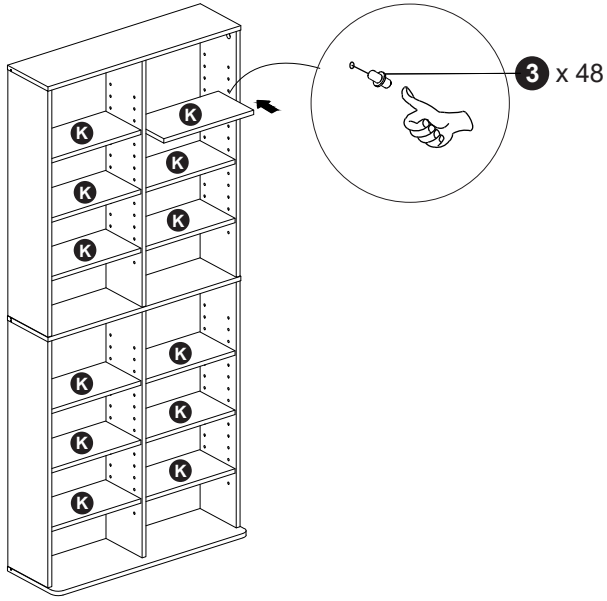

7

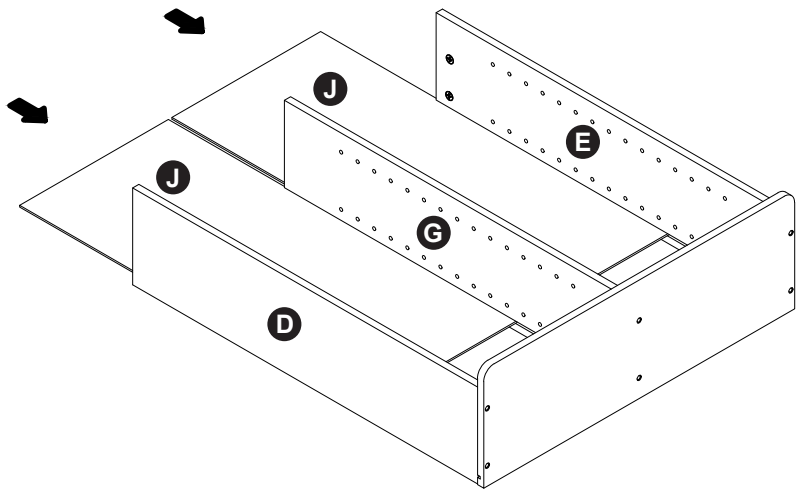

8

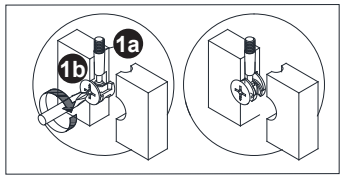

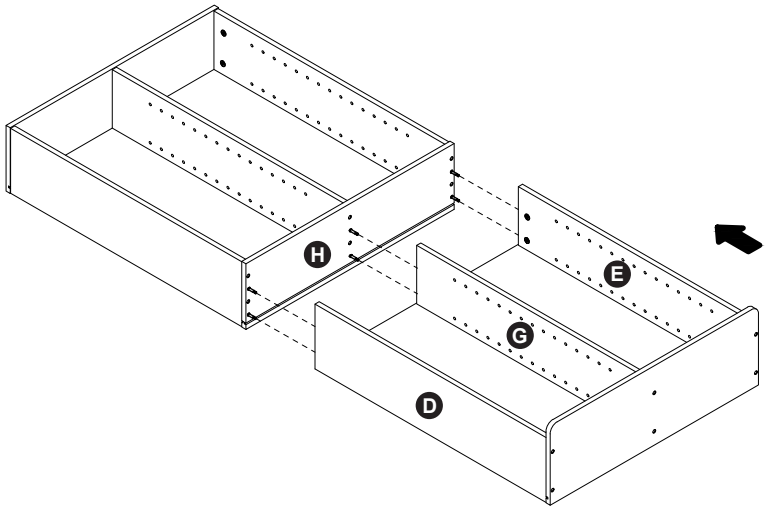

1

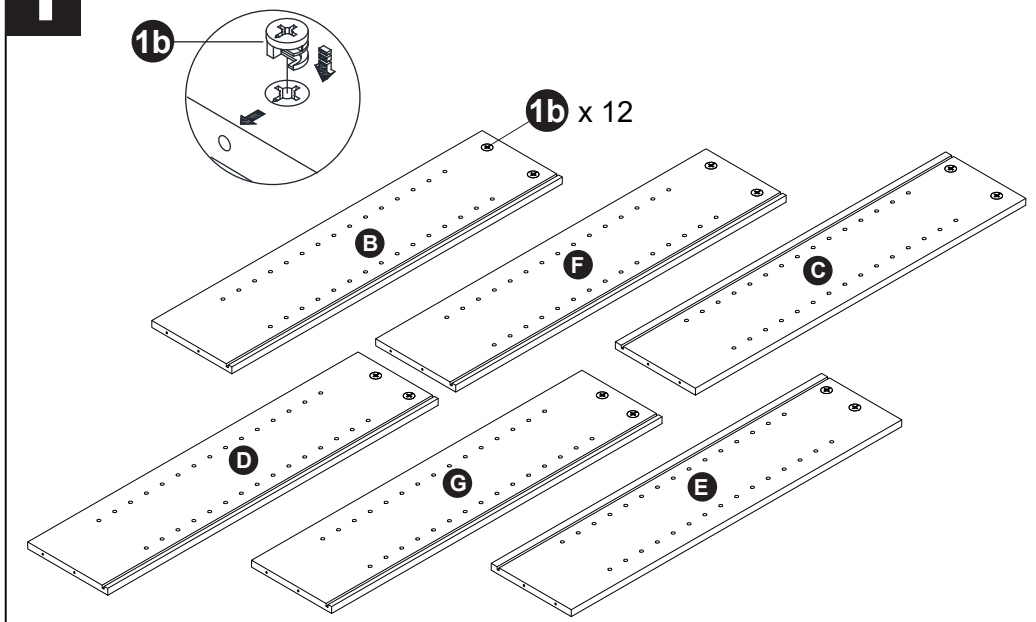

2

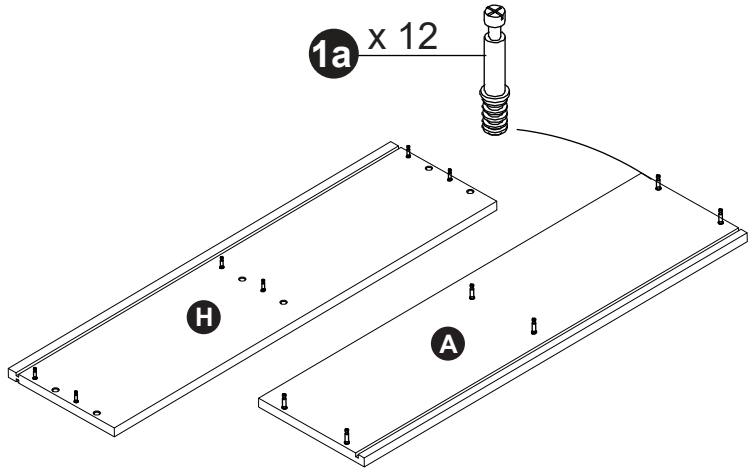

3

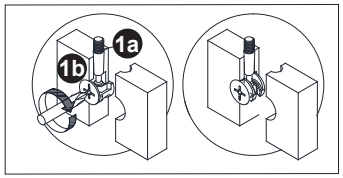

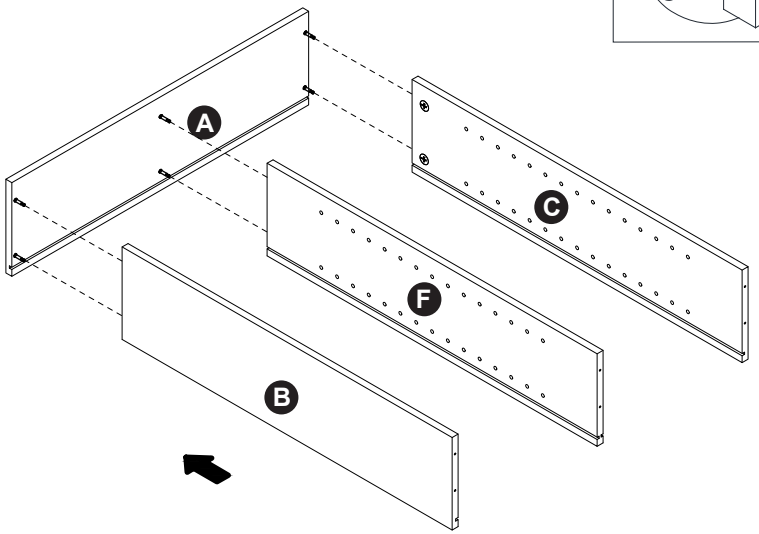

4

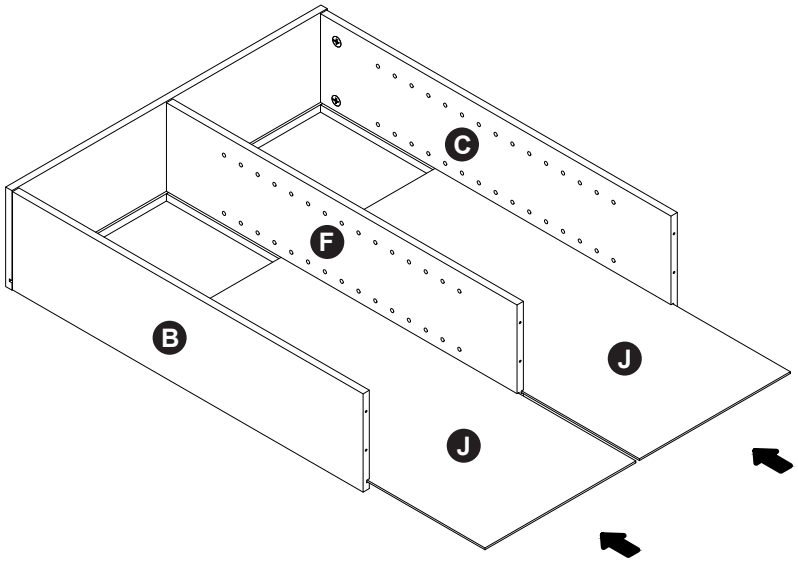

5

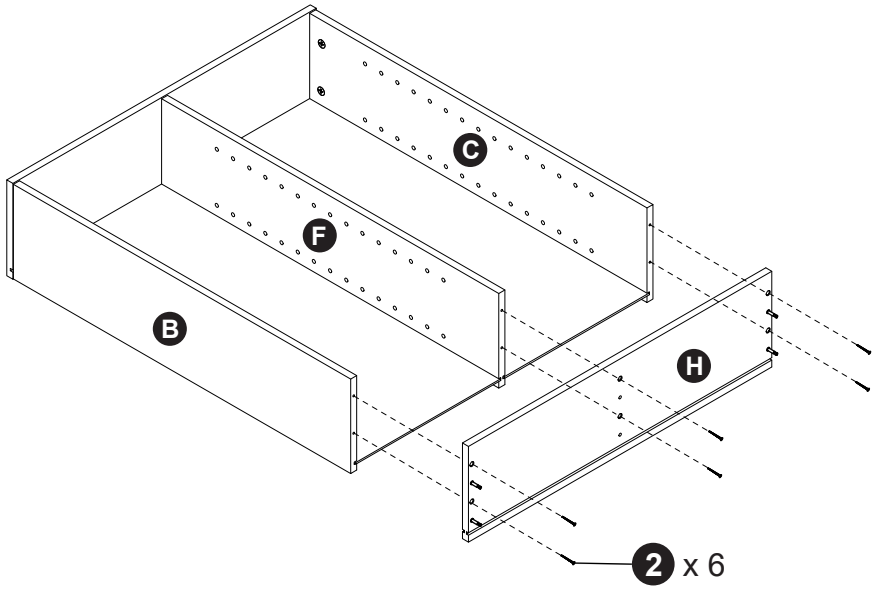

6

