

Furinno®

Fits Space, Fits Budget



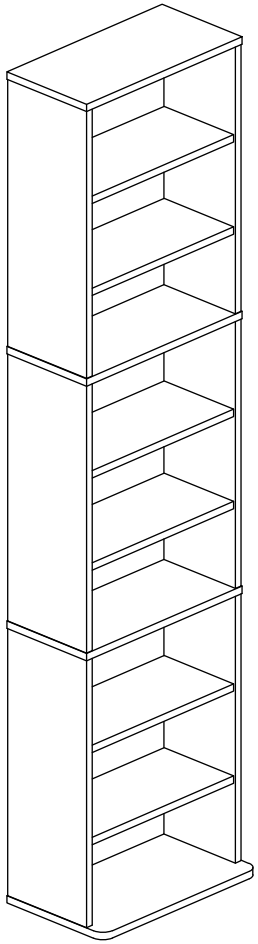

MODEL: 24069

support@furinno.com

www.furinno.com

2406920240703

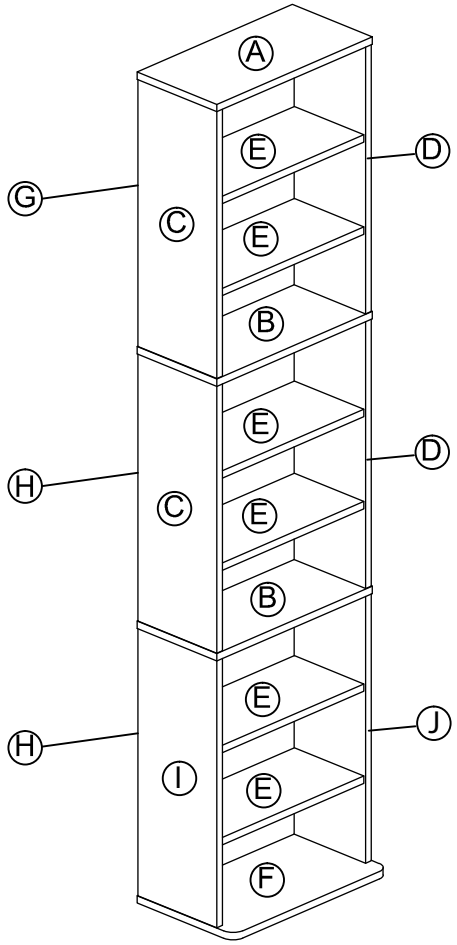

1 x 12 1a 1b M6 x 31mm 15mm	**2** x 12 M4 x32mm	**3** x 24 M5 x 6 x 16mm	**4** x 40 2.5 x 18mm
5 x 1 5a 16 x 28mm 5b 1/1/4” 5c #8 x 1” 5d 4 x 11mm	**6** x 1		

7

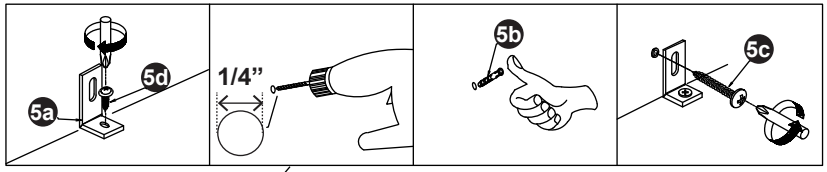

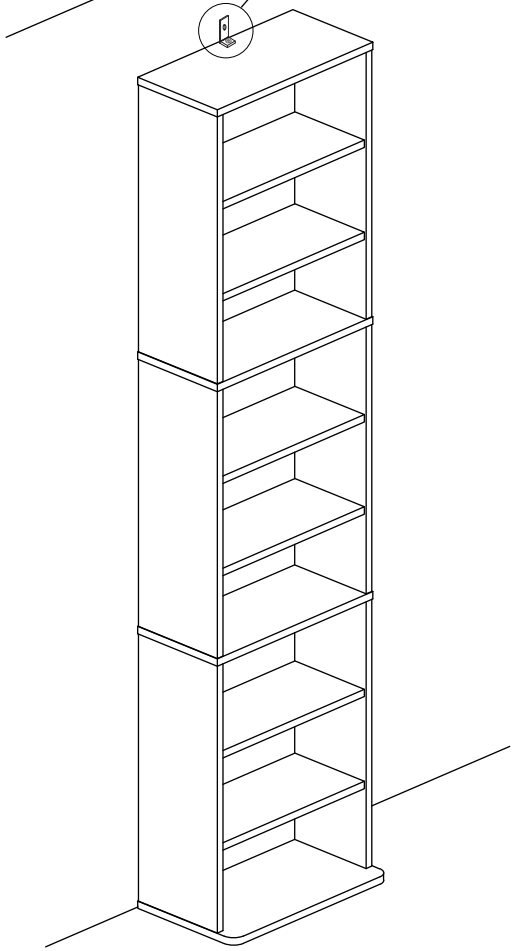

6

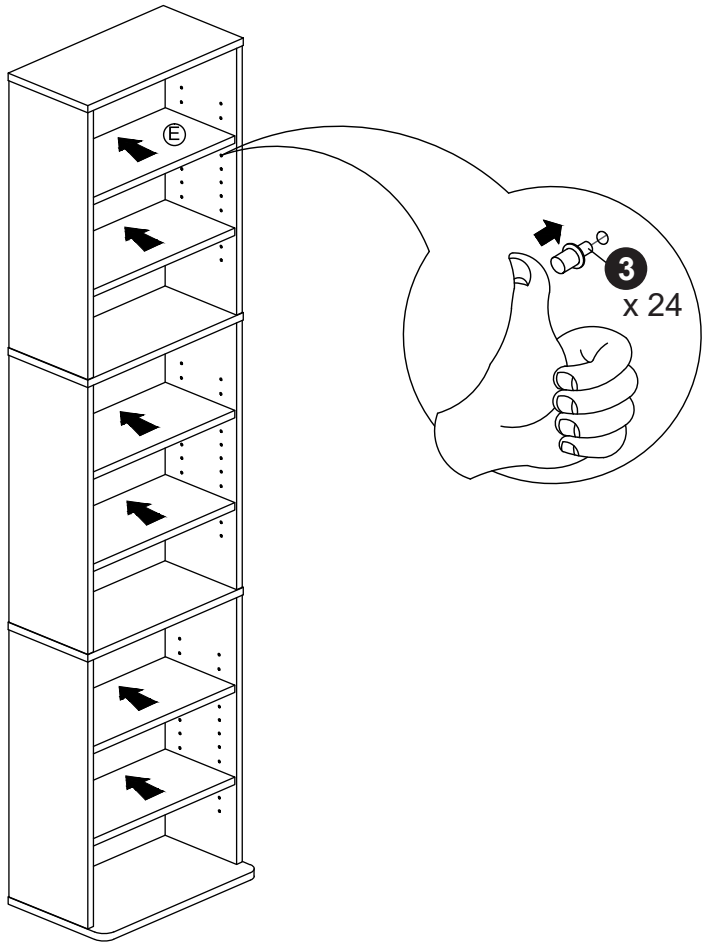
E
3
x 24

1

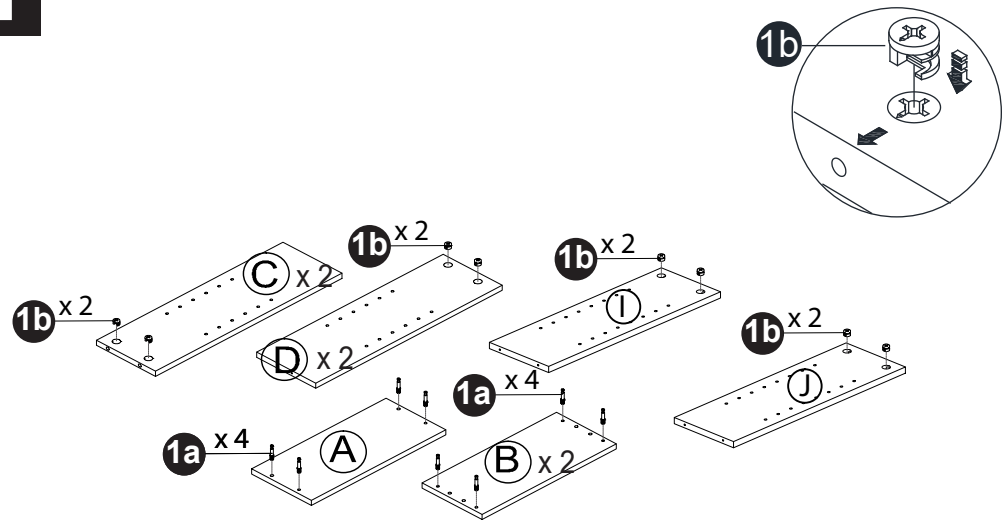
1b
1b x 2
C x 2
1b x 2
D x 2
1b x 2
I
1b x 2
J
1a x 4
A
1a x 4
B x 2

2

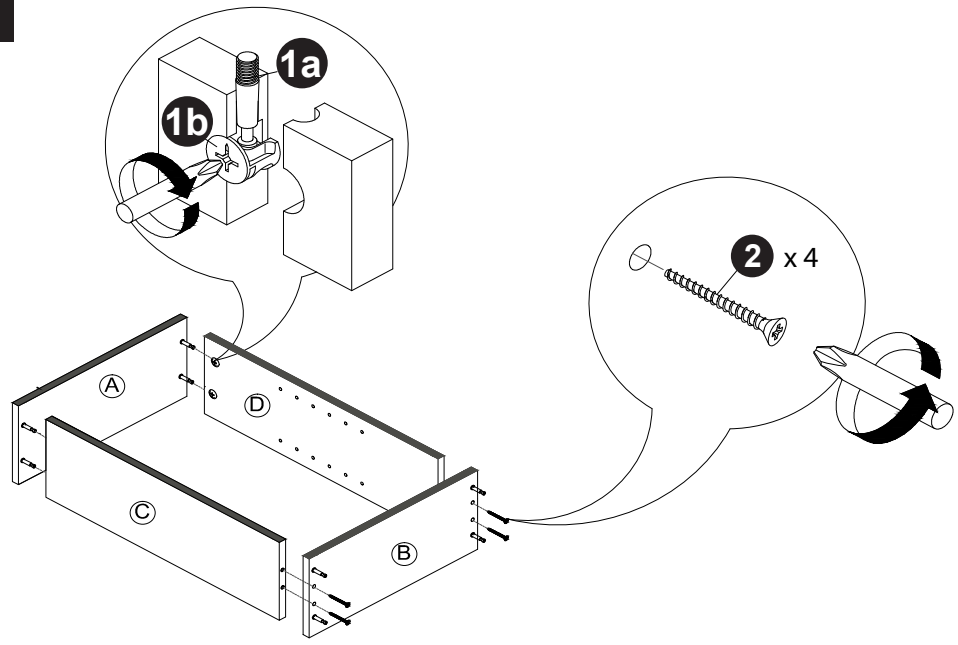
1a
1b
2 x 4
A
D
C
B

3

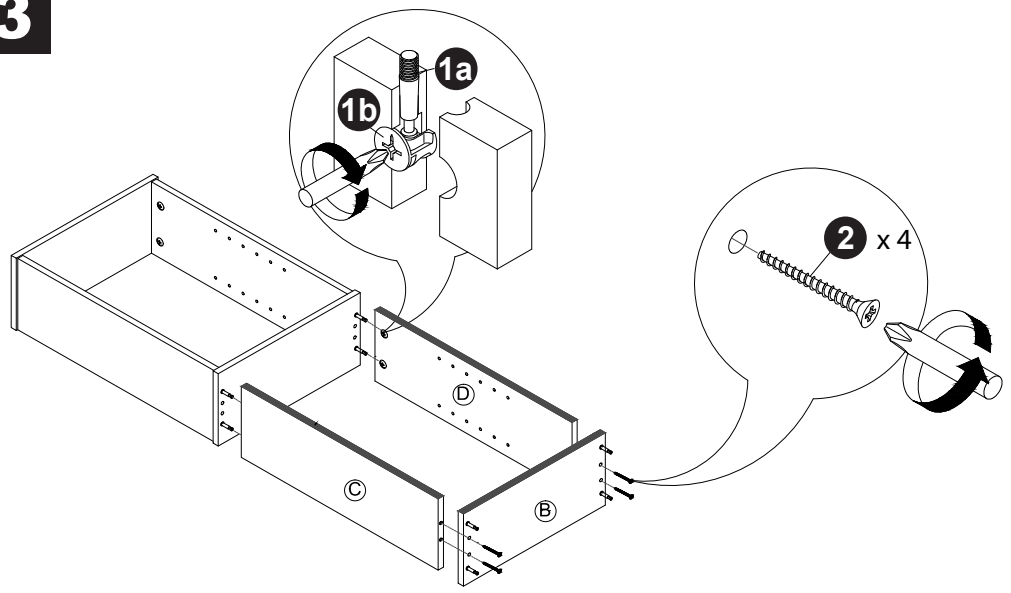

4

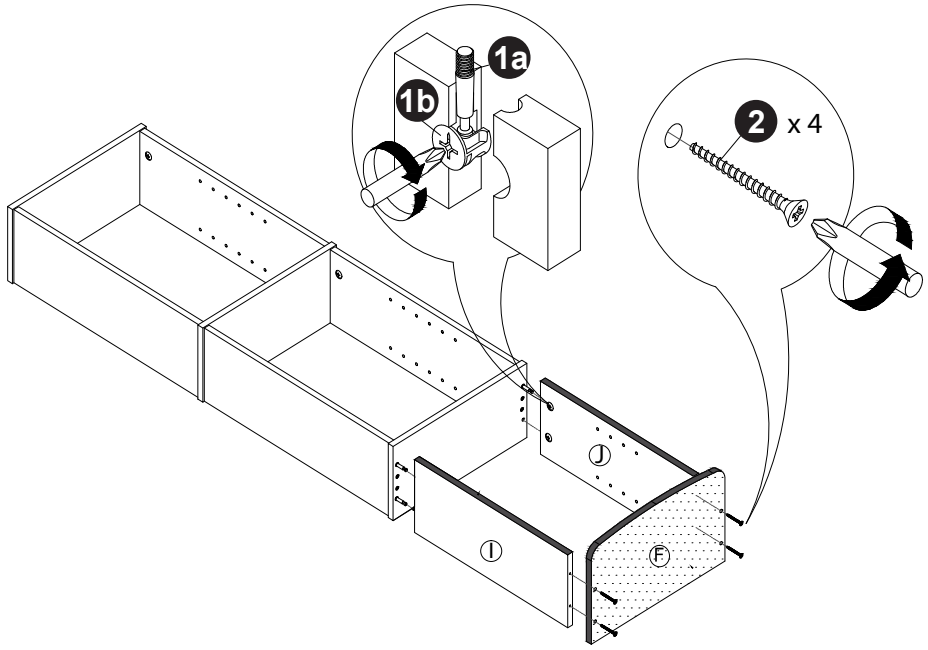

5

