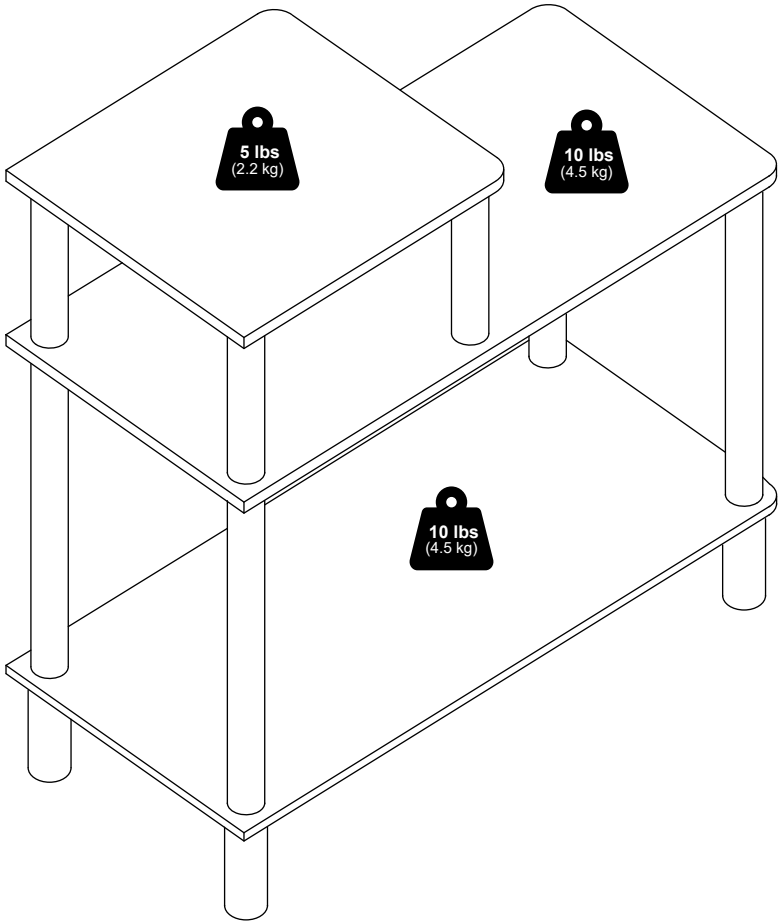





Furinno®

Fits Space, Fits Budget



00:10



x 1

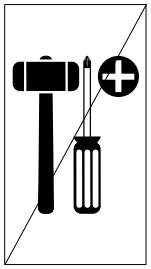

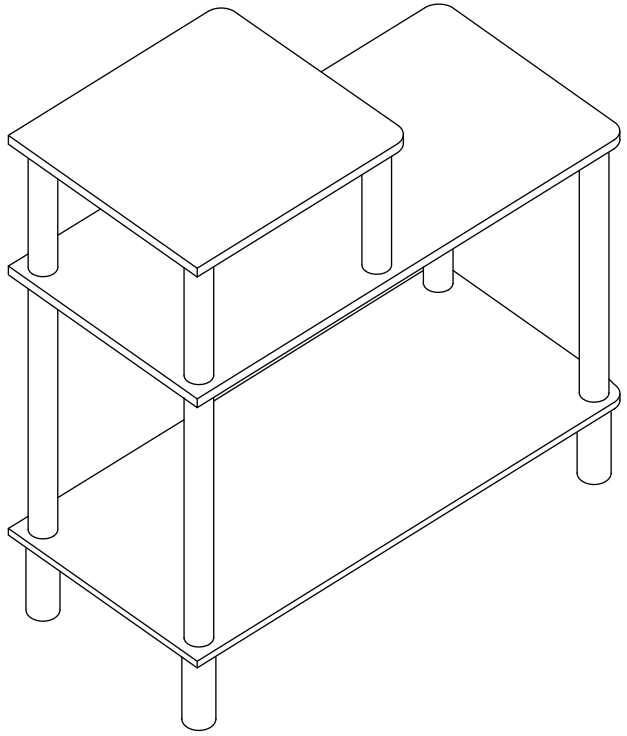

MODEL: 24100

support@furinno.com

www.furinno.com

2410020240813

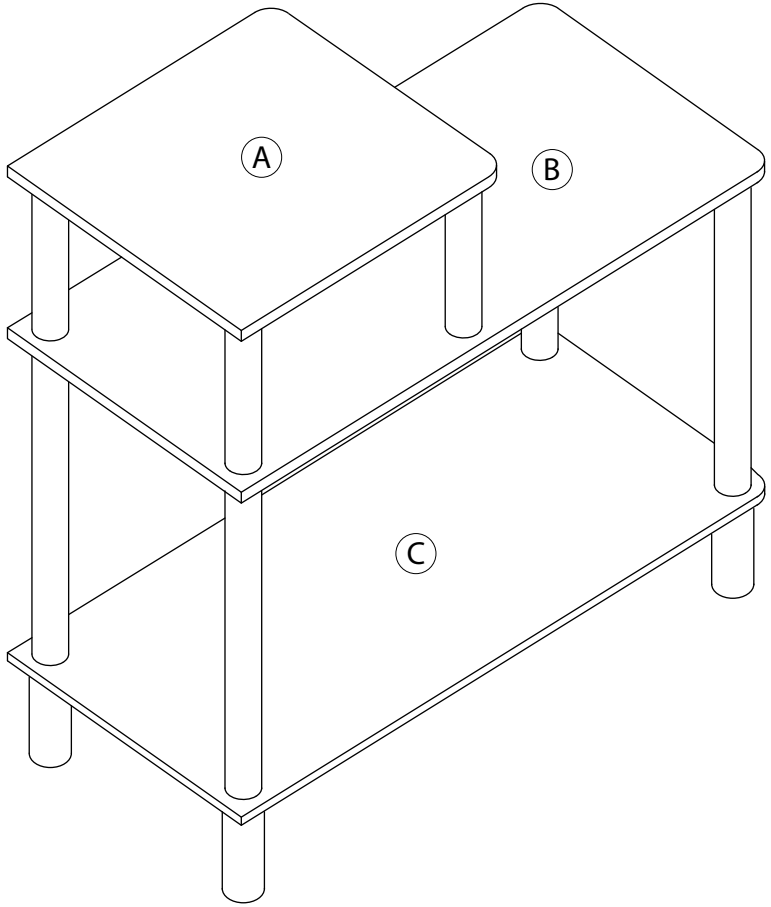

1 x 4	2 x 4	3 x 4	4 x 2	5 x 2
162mm	340mm	100mm	Ø 34 x 8mm	Ø 34 x 2mm

1

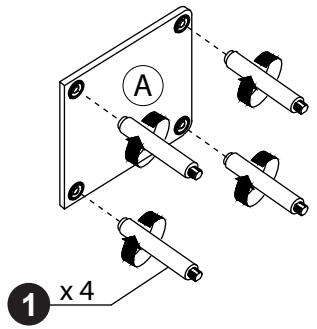

2

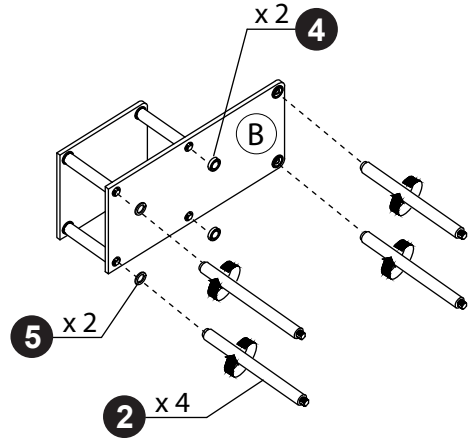

3

